Mohawk BLAZER 17

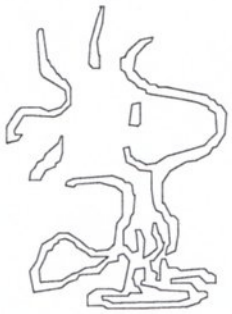

Mohawk 174 Linesplan Standing Lug Rig V8

Designs & Drawings (c) Larry E. Large

Original: 03/13/12 Revised: 03/12/22

Specifications: Scale: 3/8"=12"

Length OA: 17'-4" Beam OA: 3'-0"

Sail area: 38.88 sq ft (27.42 1 reef)

Draft (leebd up): 3.0" (253 lbs DWL)

Draft (leebd dn): ~ 25" (38.5" leebd)

Kickup Rudder & Tiller Stick (or Bridle)

Spars: solid laminations 3/4" thick SPF

Mast: 1-7/8" max dia at Tack; tapers to 1-3/4" dia Head & into Mast Step

Yard: 1-1/8" dia Boom: 1-1/4" dia

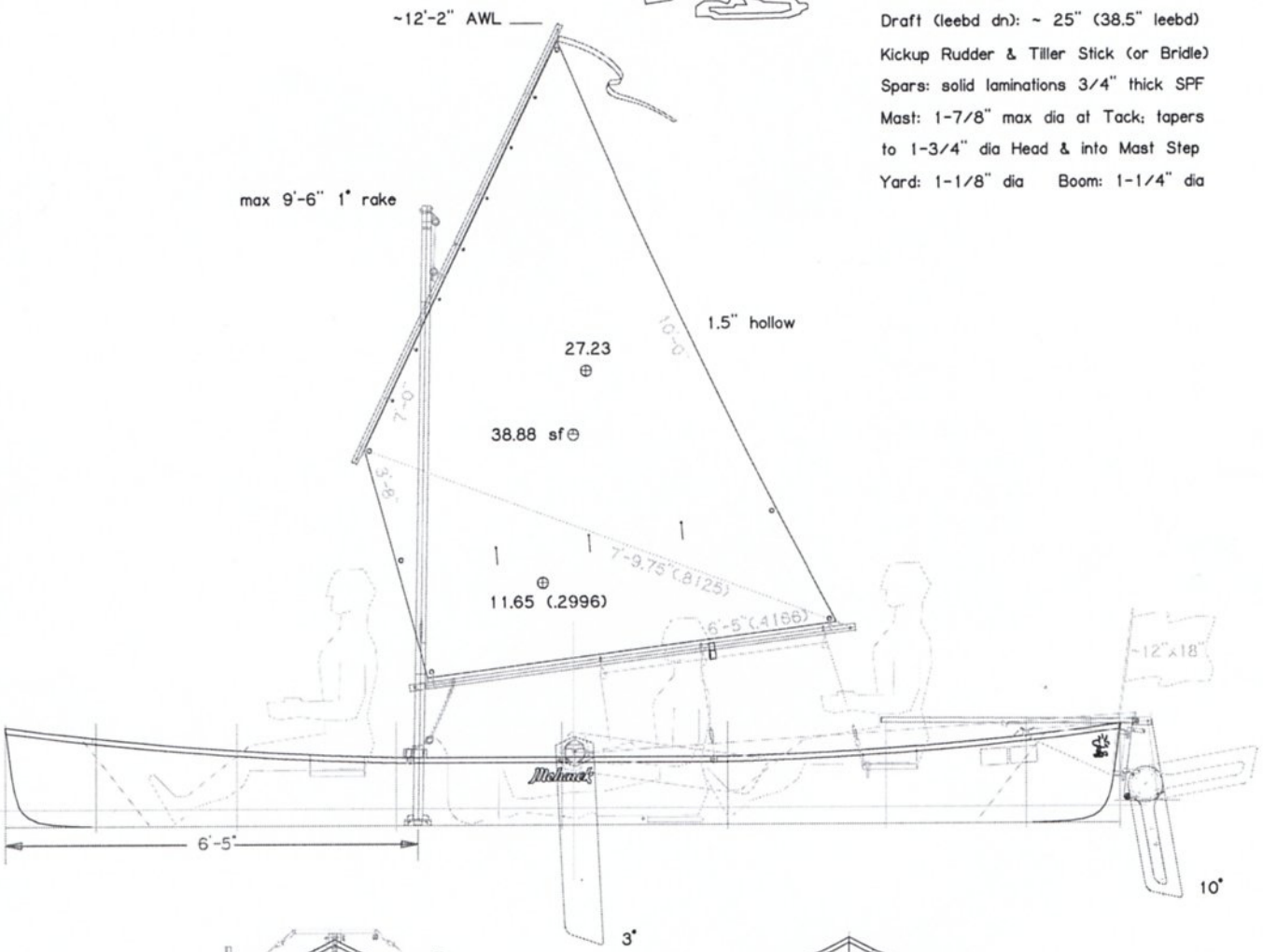

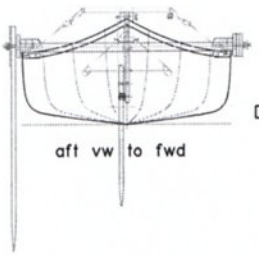

aft vw to fwd

DWL 3"=253 lbs
4"=392 lbs

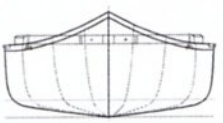

fwd vw to aft

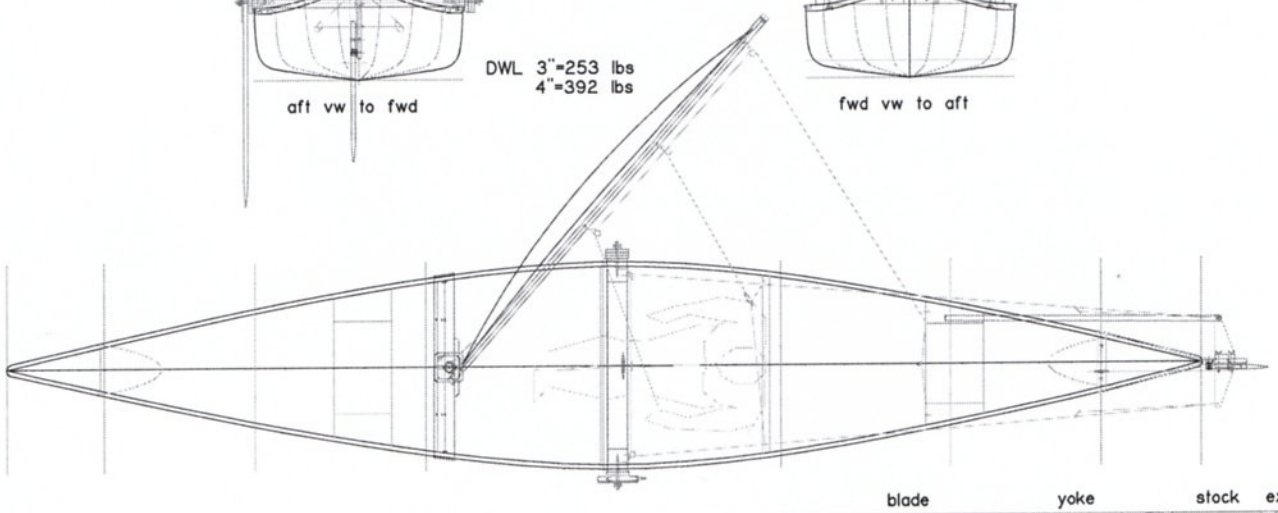

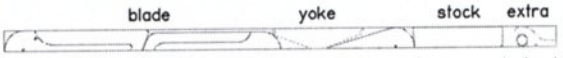

8' 1x4 Rudder Parts Layout single jaw