Nancy's China Gaff Rig

Sail, Gaff, Boom, Mast Details

REV.	S.D.			
Date	2-25-10			
Scale: 1" = 1'-0"		Page No.:	G-12	

www.devlinboat.com

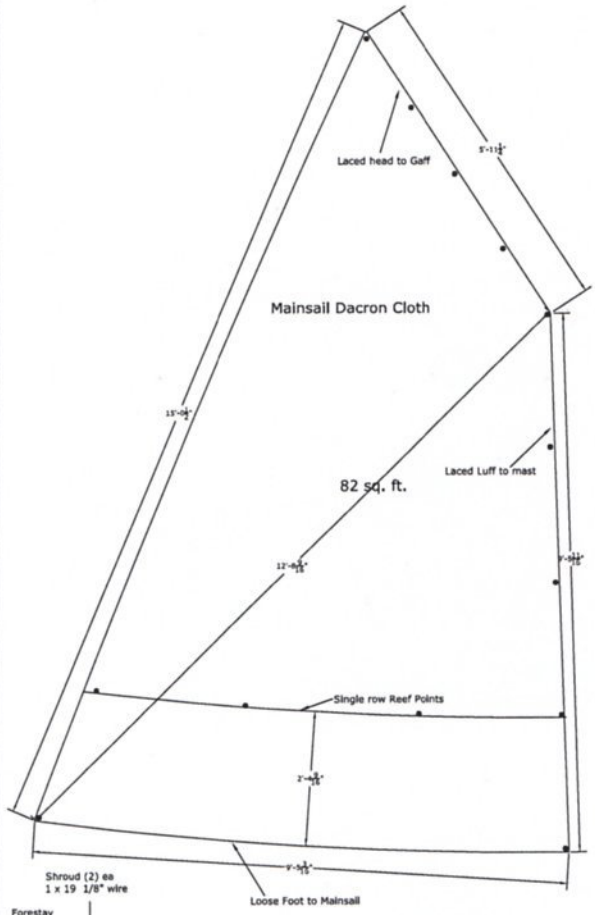

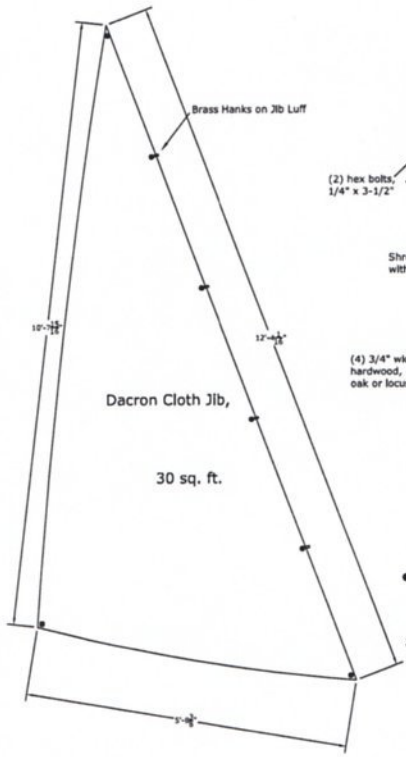

Mast upper rigging attachment

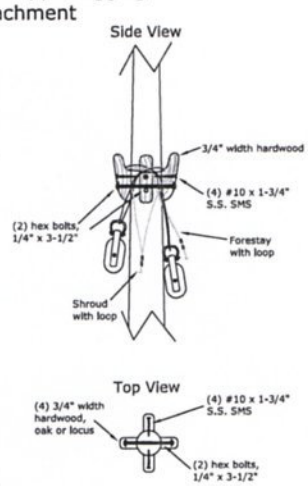

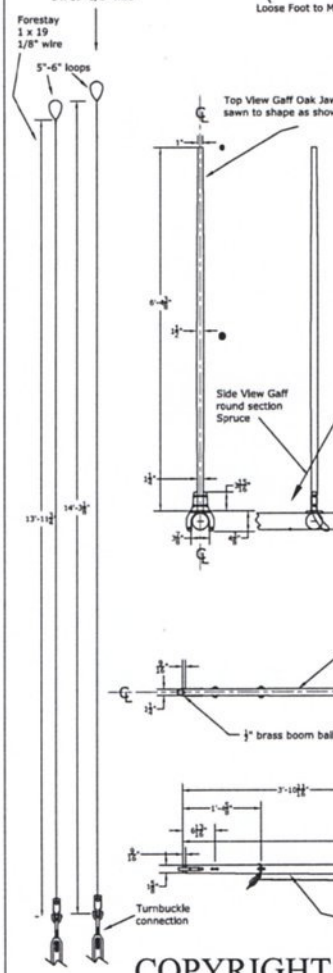

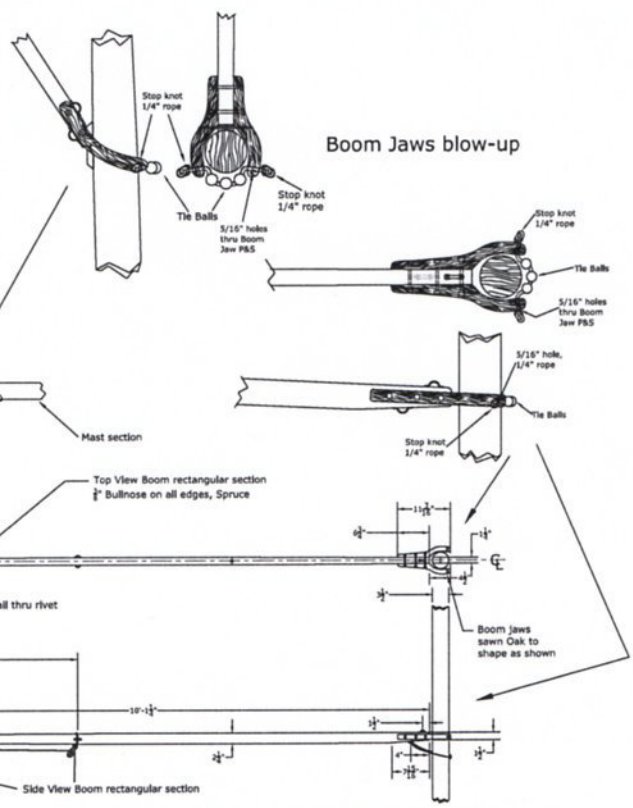

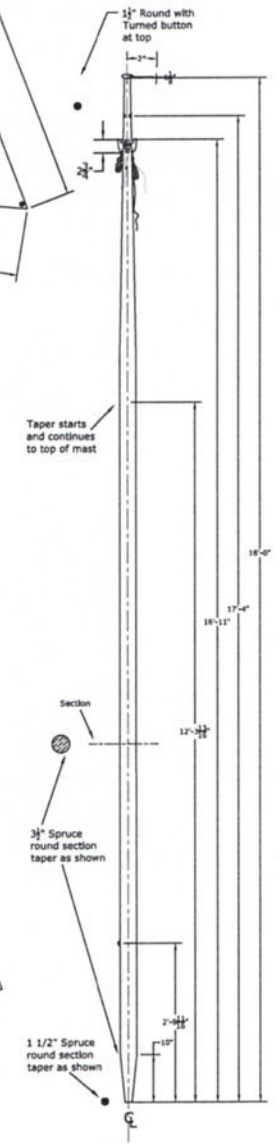

COPYRIGHT © 2010 DEVLIN DESIGNING BOATBUILDERS, INC.