VACATIONER

We used clear fir for much of the stringers and rails. This can be substituted by spruce, mahogany, or other medium hardwood that will hold a screw well and not split too badly. Again, ask to pick through and look for nice straight-grains and not too heavy nor brittle. We used just the regular 8-ounce cloth and fiberglass mat available in discount paint stores, together with boat resin. The laminating and finishing resins also available are better suited to projects where shaping is done just once, as with a surfboard. With the boat, the smoothing out of the panels goes on through several steps.

For paint, again, we used simple oil base gloss enamel. Fresh resin and fresh paint that hasn't been sitting on the shelf for years is a lot easier to work with, so we look for a place where the shelf turnover is quick. Experts will tell you there are special boat paints. We've found that, other than the non-fouling bottom paint, boat paint is in no way better than a good household exterior oil base enamel. In fact, boat paints are not only often stale because of their high cost and slow turnover, but their durability just isn't that great.

With our smaller boats that are generally dry-stored, we've always used zinc-plated wood screws, with only occasional problems where the heads are shaped down to the base metal in the hull-shaping step. But for a boat this size, which may well spend a lot of long periods in saltwater, we used stainless. Yes, they cost a lot more (but they're strong and easy to work with at least). The keel and stem layers were stuck together with bronze, ribbed nails. For rigging, we used lumberyard quality galvanized iron fittings. These parts are all out where you can see and replace them easily if they start to rust. And the cost to replace is far below the cost of rigging with stainless throughout. You can usually get 3-4 years of use out of the turnbuckles, etc. before you need to replace, depending on exposure to the salt. If you look at most work boats, you'll see a lot of galvanized iron fittings for just these reasons.

For glue, we've come to use the powdered, water-mix marine-grade glue. It sticks about as well as the two-part, poisonous, always-have-one-part-leftover resorcinol glues. We've found it's getting a good clamping pressure that makes the difference in gluing. A well mixed, well attached water-mix glue has given us good service over the years. The easiest way to mix is to pour a little more powdered glue than you think you'll need (it shrinks when mixed) into a Tupperware, sealable bowl. In case you want to take a break in building, the glue can be kept sealed and cool for an hour or two over its usual working time of about one to two hours. Add water a little at a time to the powder until it wads into one, sticky ball, then thin to a batter consistency that's easy to spread, but not too watery or lumpy.

TOOLS AND PARTS:

The wood screw controversy: some people argue Phillips head screws are easier to power drive than slot because they grab better initially, they're made more uniform, they hold the power driver better, and they're always in position for the screwdriver head. Slot-head screw advocates say that's great, but one slip with a Phillips driver and you've had it. You can't even back it out. Whereas with a slot head, no matter how you mauid it going in, there's always a fresh surface ready to back it out so you can replace. With the hardness of stainless, we tend to lean toward Phillips head, and use slot heads with softer screws.

We recommend 1" #8 flathead stainless Phillips woodscrews for attaching ¼" plywood to the framing, 1¼" for attaching the ½" plywood to the framing, and 1½" for attaching the 1" stock (actually ¾" thick) to the framing.

There are a lot of screws to be driven, but with the right driving system, we can do up to about 100 screws in seven minutes (our record). After about the tenth boat my wrist began to give out and I finally came out of the Stone Age to discover power screwdrivers.

To drive a lot of screws well, we've found it's best to predrill the holes for the screws, countersink, and then drive. Predrilling is the best way to avoid splitting the wood, and it's what's needed. In one we put a combination drill bit/countersink that is the right size for the screw we're using (the instruction sheet provided by the bit manufacturer tells you what's right). Then the screw plate holes can be drilled and the screw driven home. Then, after the screw is driven, you can drive a line (if we don't plan to follow it) Pick out one side or the other of the screw slot and drive a line with either side of the blade: doesn't matter which, as long as you're consistent from screw to screw. But a set of screws driven down into the ¼" plywood (only ¼" thick) so the line and step in the screw slot can be followed with the screwdriver is a great help in keeping the screwdriver from slipping out and marring the surface of the plywood. Also, the screw will be driven in straighter and will hold better.

Another trick we've found helpful is countersinking the screw slightly deeper than the surface of the plywood. This is done with a ⅜" countersink bit. Countersinking the screw slightly deeper than the surface of the plywood makes it easier to start the screw straight and to keep it straight. Countersinking also makes it easier to fill the screw slot with a putty made of resin and sawdust. Countersinking also makes it easier to sand the surface smooth when you're finishing.

Ten extra seconds cutting can easily save ten minutes making up for a rushed cut later.

To drive a lot of screws well, we've found it's best to predrill the holes for the screws, countersink, and then drive. Predrilling is the best way to avoid splitting the wood, and it's what's needed. In one we put a combination drill bit/countersink that is the right size for the screw we're using (the instruction sheet provided by the bit manufacturer tells you what's right). Then the screw plate holes can be drilled and the screw driven home. Then, after the screw is driven, you can drive a line (if we don't plan to follow it) Pick out one side or the other of the screw slot and drive a line with either side of the blade: doesn't matter which, as long as you're consistent from screw to screw. But a set of screws driven down into the ¼" plywood (only ¼" thick) so the line and step in the screw slot can be followed with the screwdriver is a great help in keeping the screwdriver from slipping out and marring the surface of the plywood. Also, the screw will be driven in straighter and will hold better.

Another trick we've found helpful is countersinking the screw slightly deeper than the surface of the plywood. This is done with a ⅜" countersink bit. Countersinking the screw slightly deeper than the surface of the plywood makes it easier to start the screw straight and to keep it straight. Countersinking also makes it easier to fill the screw slot with a putty made of resin and sawdust. Countersinking also makes it easier to sand the surface smooth when you're finishing.

CAULKING:

Those who actually build and use boats for a project like this usually have their own favorite caulking system. We've found that the best caulking for the bottom seams is a soft, flexible one that will allow the wood to swell and shrink with the seasons. Hard caulking will work for a while, but then it will crack and fall out. Soft caulking will stay in place for years.

Those who actually build and use boats for a project like this usually have their own favorite caulking system. We've found that the best caulking for the bottom seams is a soft, flexible one that will allow the wood to swell and shrink with the seasons. Hard caulking will work for a while, but then it will crack and fall out. Soft caulking will stay in place for years.

I've been using a soft, flexible caulking compound called Sea Dog Seam Compound #1 for the bottom seams. It comes in a tube and is applied with a caulking gun. It's available in white, gray, and black. Sea Dog also makes a #2 caulking compound that's a little stiffer and is used for topside seams. I've been using the #1 for the bottom seams and the #2 for the topside seams. Sea Dog products are available at most chandleries and marine supply stores.

Before caulking, the seams should be primed with a primer recommended by the caulking manufacturer. Primer helps the caulking stick to the wood and helps prevent the caulking from drying out too fast.

Caulking is applied with a caulking gun. Cut the tip of the caulking tube at a 45° angle and cut the opening about the size of the seam you're caulking. Force the caulking into the seam with enough pressure to make sure it completely fills the seam. Then run a wet finger along the seam to smooth the caulking and force it into the seam. Wipe off excess caulking with a rag.

Caulking should be done on a dry day when the temperature is above 60°F. Caulking will take longer to cure in cold or damp weather.

Caulking cures by evaporation, so it will shrink a little as it cures. Apply a second coat of caulking if the seam looks starved after the first coat has cured.

Caulking can be painted over after it has cured for a few days.

PAINTING:

Paint, again, was simple oil base gloss enamel. Fresh resin and fresh paint that hasn't been sitting on the shelf for years is a lot easier to work with, so we look for a place where the shelf turnover is quick. Experts will tell you there are special boat paints. We've found that, other than the non-fouling bottom paint, boat paint is in no way better than a good household exterior oil base enamel. In fact, boat paints are not only often stale because of their high cost and slow turnover, but their durability just isn't that great.

With our smaller boats that are generally dry-stored, we've always used zinc-plated wood screws, with only occasional problems where the heads are shaped down to the base metal in the hull-shaping step. But for a boat this size, which may well spend a lot of long periods in saltwater, we used stainless. Yes, they cost a lot more (but they're strong and easy to work with at least). The keel and stem layers were stuck together with bronze, ribbed nails. For rigging, we used lumberyard quality galvanized iron fittings. These parts are all out where you can see and replace them easily if they start to rust. And the cost to replace is far below the cost of rigging with stainless throughout. You can usually get 3-4 years of use out of the turnbuckles, etc. before you need to replace, depending on exposure to the salt. If you look at most work boats, you'll see a lot of galvanized iron fittings for just these reasons.

For glue, we've come to use the powdered, water-mix marine-grade glue. It sticks about as well as the two-part, poisonous, always-have-one-part-leftover resorcinol glues. We've found it's getting a good clamping pressure that makes the difference in gluing. A well mixed, well attached water-mix glue has given us good service over the years. The easiest way to mix is to pour a little more powdered glue than you think you'll need (it shrinks when mixed) into a Tupperware, sealable bowl. In case you want to take a break in building, the glue can be kept sealed and cool for an hour or two over its usual working time of about one to two hours. Add water a little at a time to the powder until it wads into one, sticky ball, then thin to a batter consistency that's easy to spread, but not too watery or lumpy.

TOOLS AND PARTS:

The wood screw controversy: some people argue Phillips head screws are easier to power drive than slot because they grab better initially, they're made more uniform, they hold the power driver better, and they're always in position for the screwdriver head. Slot-head screw advocates say that's great, but one slip with a Phillips driver and you've had it. You can't even back it out. Whereas with a slot head, no matter how you maul it going in, there's always a fresh surface ready to back it out so you can replace. With the hardness of stainless, we tend to lean toward Phillips head, and use slot heads with softer screws.

We recommend 1" #8 flathead stainless Phillips woodscrews for attaching ¼" plywood to the framing, 1¼" for attaching the ½" plywood to the framing, and 1½" for attaching the 1" stock (actually ¾" thick) to the framing.

There are a lot of screws to be driven, but with the right driving system, we can do up to about 100 screws in seven minutes (our record). After about the tenth boat my wrist began to give out and I finally came out of the Stone Age to discover power screwdrivers.

To drive a lot of screws well, we've found it's best to predrill the holes for the screws, countersink, and then drive. Predrilling is the best way to avoid splitting the wood, and it's what's needed. In one we put a combination drill bit/countersink that is the right size for the screw we're using (the instruction sheet provided by the bit manufacturer tells you what's right). Then the screw plate holes can be drilled and the screw driven home. Then, after the screw is driven, you can drive a line (if we don't plan to follow it) Pick out one side or the other of the screw slot and drive a line with either side of the blade: doesn't matter which, as long as you're consistent from screw to screw. But a set of screws driven down into the ¼" plywood (only ¼" thick) so the line and step in the screw slot can be followed with the screwdriver is a great help in keeping the screwdriver from slipping out and marring the surface of the plywood. Also, the screw will be driven in straighter and will hold better.

Another trick we've found helpful is countersinking the screw slightly deeper than the surface of the plywood. This is done with a ⅜" countersink bit. Countersinking the screw slightly deeper than the surface of the plywood makes it easier to start the screw straight and to keep it straight. Countersinking also makes it easier to fill the screw slot with a putty made of resin and sawdust. Countersinking also makes it easier to sand the surface smooth when you're finishing.

Ten extra seconds cutting can easily save ten minutes making up for a rushed cut later.

CONTINUED PART 2

After cutting the first outer layer, we used the set of cut pieces as templates for cutting the other outer layers. Then the rough-cut boards for the outer layer were laid on the inner layer with the edges flush, the pieces positioned, marked, cut and all three layers were set aside. Then the inner layer was glued and nailed on to the center layer, the edges trimmed flush, and the outer layer glued and nailed on.

The splined joint between the panels is strong and will keep the panels in position on it's own, but we've found that it's best to add a few nails (ringed boat nails) to each panel. We've also found that it's important edge-to be lined up to the top of the keel and stem. Otherwise, the edges of the panels won't be flat against the keel and stem for attaching the inner layer of the center layer of the boat.

The keel and stem are made up of three layers. After marking and cutting parts for one layer, we used these parts as patterns for the other two layers. After marking and cutting parts for the other outer layer, these and marked parts were used as templates for the parts for the inner layer of the center layer (see the exploded view). Then the parts were laid out as indicated, then glued the cut pieces

© 1977 WOODENBOAT PUBLICATIONS, INC.

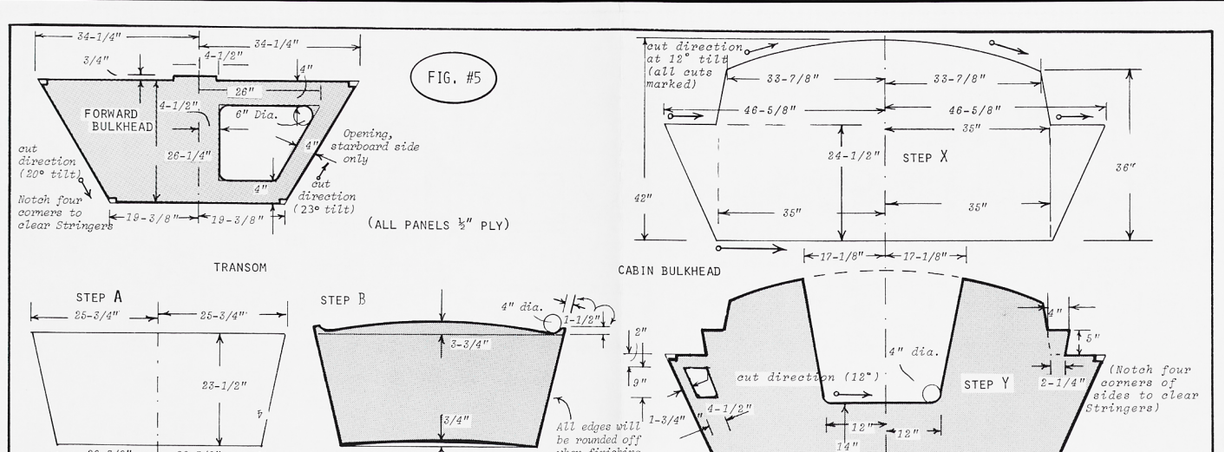

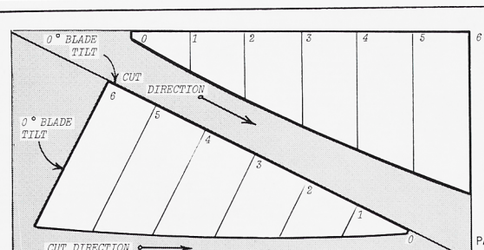

FIG.#7

DECK PANELS
(ALL PANELS ½" PLYWOOD, FINISHED SIDE UP, SAWBLADE TILT SET AT 27½ NOTING CUT DIRECTION)

PANEL LAYOUT FOR PORT AFT DECK AND STARBOARD SIDE DECK

PANEL LAYOUT FOR FORDECK

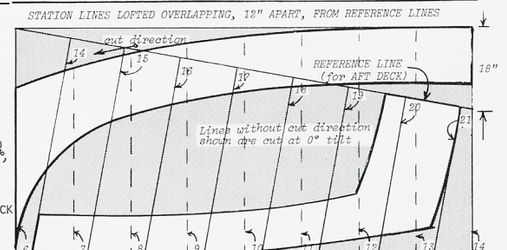

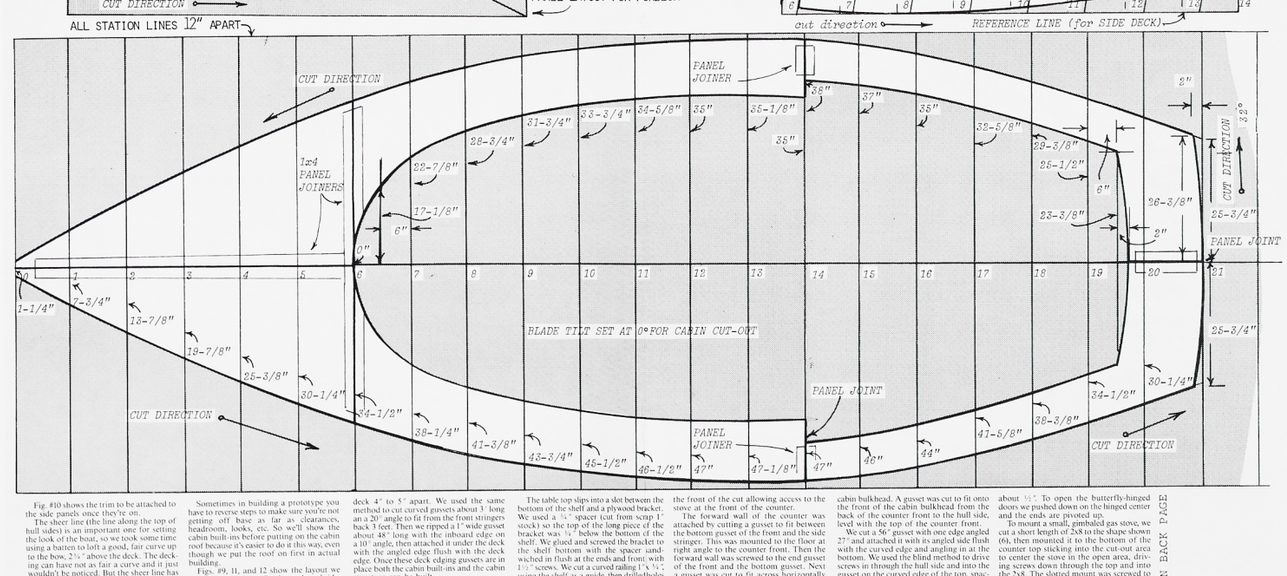

flipped it over, and cut the curve with the sawblade set at 32° tilt, and so the side of the 2x4 was then layed down on top of the side stringers with its center ½" forward of the center of the rear edge of panel E at the center. We marked the end cuts on the bottom of the 2x4 using the inside edges of the side stringers as guides, then cut these and glued and screwed the 2x4 to the bottom panel so the rear edge was parallel to the rear edge of the panel and ½" forward of it. The rear ends of the side stringers were trimmed off flush with the angled rear of the 2x4. At this point the boat should look pretty much like the sketch at the top of Fig. #1.

DECK AND BULKHEADS:

Fig. #5 shows the dimensions needed to cut the Cabin Bulkhead, the Front Bulkhead, and the transom forming the rear of the boat. We marked the front bulkhead as shown, with the opening on the starboard side only. The transom was lofted in two steps, as shown at lower left and A and B.

To the right are the two steps used to loft the Cabin Bulkhead. In "A" we drew the basic shape, and in "B" we added the bumps to the sides of the cabin, marked the cabin opening and chart cubby opening on the starboard side. (We should use starboard and port instead of right and left because port always means left side when facing the front of the boat, to save confusion as things get turned around in assembly.)

Fig. #7 shows the layout and lofting for the deck parts, also cut from ½" ply. The panel at upper right shows the way the two foredeck panels were layed out to get an opposing pair from a single sheet of plywood. Again, we've shown blade tilt and cut direction where needed. Another way is to cut out the foredeck half next to the side edge, then simply flip it over to form a pattern for the opposite side to draw around.

The panel at lower right shows the side and aft deck panels can be lofted, using overlapping station lines for the two parts (in this case, the port aft deck and starboard side deck). To get the starboard aft deck and port side deck, we simply flipped the cut parts over, laid them in the opposite position on another 4x8 panel, and drew around them reversing the directions shown on the tilt cuts. (A little common sense will always solve this if our directions have gotten hazy. The side cuts for all bottom and deck parts should angle out at the top, and so on.)

Fig. #7 also shows how the panels are attached together with 1x4 panel joiners, glue, and 1¼" screws spaced about 3" apart and 1" in from the butted together joint. Some of these joiners will be cut away later for hatches, etc., but they're needed now to get a little strength and to promote a nice deck bend. We set all joiners 1½" in from the bottom of the side edge to clear the stringers to be attached to the bottom side of the deck panel.

To assemble the deck, we placed all parts in position on a flat surface where it could remain until all the side stringers were attached. Next we glued all joining surfaces as all the 1x4 panel joiners were attached squarely under the butt joints to the bottom (unfinished) surface of the decking.

Before moving the assembled panels we used the same attach-flex-drill and drive-the-next-screw method used to attach the bottom stringers down onto the hull bottom panels. In this case the wide side of the stringers were glued and set up against the bottom of the deck panel with the angled side of the stringer held flush with the angled side edge of the decking.

Again, we started at the front, slipping the glued stringer under the decking, aligning side edges, and drilling and driving 1¼" screws spaced 4" apart this time. We trimmed off the front stringer at the front tip on the same 155° angle as we used on the bottom stringers, then positioned the inner edge of the stringers at the tip about ½" out from the center line on both sides. No stringer was attached across the rear of the deck at this stage. We let the deck panel assembly cure overnight before moving it for assembly. In the meantime we propped the hull bottom up and retied to top of the stem to hold the bottom horizontal while the stem was held vertical.

Fig. #6 shows how the bulkheads and decking will be assembled. We cut the angled spacer to fit between the cabin bulkhead and panel joiner, shown at upper left.

This was ripped from a 1x2 or scrap to fit behind the joiner between bottom panels C and D, extending from side to side between the lower chine stringers. This was glued on its bottom and front edge and attached, as shown with 1¼" screws spaced 3", driven up through the bottom. We ripped a 1x6 to 4½" wide and then cut it to fit between the chine stringers when butted back against the front of the joiner between bottom panels A and B. All center lines were aligned before each bulkhead was attached.

The basic assembly plan for the frame is to attach the forward bulkhead, cabin bulkhead, and transom to the hull bottom. Then the decking is set down onto the tops of these, the front of the decking is screwed to the notched part of the stem, and then attached to the bulkheads.

To start the framing we glued and attached the forward bulkhead down onto the hull bottom, back against the stem at the front of the joiner, with the finished surface facing aft and the opening on the starboard side. We use 1¼" screws spaced about 4" apart, ½" up from the bottom and angling down into the center of the edge of the spacer, as shown in Fig #6 at bottom.

Next, we glued and attached the cabin bulkhead, finished side aft (with the small opening on the port side) in the same way with 1¼" screws spaced 5" apart. To prevent damage to these joints in assembly, we nailed braces to hold the bulkheads approximately in place until final assembly, as shown in Fig. #6.

To attach the transom we placed it down against the front of the stern post, inserted between it and the rear bottom stringer. We centered the transom with its finished side to the rear and its center line extending up squared with the bottom, then we drew around the stern post and bottom stringer to show where glue should be painted on before joining. We smoothed off the bottom edge and all joining surfaces to get a good watertight joint, then we painted glue onto all joining surfaces, positioned the transom in place, squared vertically with the bottom, when viewed from the front or rear, then drove a 1¼" screw in through the rear of the transom and into the bottom stringer close to the stern post. Next we drove three screws in through the front of the transom to sink into the front of the stern post. Next, we flexed the bottom of the transom forward to drill and drive in the screws out to either side. We had to space the screws closer together to pull the panel forward against the rear of the curved rear stringer. Switching to 1½" screws and inserting the screws through ¾" washers before driving them in helps to pull the panel into its bend. The screws with washers can be removed later and re-driven without washers to countersink completely after the glue has set.

To help pull the panel we cut and kerfed the transom top stringer so it could be attached ½" down from the top line of the front of the transom. The kerfs (1" deep cuts across the bottom of the stringer spaced 3" apart) allow the downward flexing of the stringer. We drilled and drove 1½" screws in through the transom rear into the center of the stringer, spacing the screws to be centered between the kerfs, 3" apart, working from the center out to both sides. Before attaching the decking we tested the fit, carefully lifting the deck assembly over the cabin bulkhead to set it down on top of the bulkheads and the notch at the top rear of the stem. The delicate point of the decking assembly, before the sides are attached is at the butt joint of the top side stringers. If the decking seems too weak at this point to lift, a second 2" scrap of stringer or other scrap can be screwed temporarily to the top side of the decking to hold the deck curve more uniform at the joint until the sides can be attached. The real strength of the decking is supplied by the stressed skins of the hull sides and cabin sides. We adjusted the positions of the parts, with the forward tip of the deck now tucked in place down onto the stem top.

Next, we ripped and cut the 12° angled gussets to fit up under the decking and against the rear of the cabin bulkhead. ¾" x ¼" x 1' gussets to fit up under the decking joiners at the top of the forward bulkhead and the front of the bulkhead were also cut to fit.

To hold the hull square, it's necessary to align all centerlines. If misalignment occurs, better check the actual placement of the bulkheads on the bottom *and* the vertical positioning of the stem. If a bulkhead is a little off center the decking may pull a little notching or adjustment to make up for the placement and still keep the decking squarely centered above the bottom panels.

To attach the decking, we lifted the front of the decking carefully and painted the joining surfaces with glue, positioned the front of the decking on the notch of the stem as shown and drove down four 1½" screws to attach. Next the decking was lifted a little at the front bulkhead, glue was painted on to joining surfaces, then glued gussets were screwed to the bottoms of the deck panel joiners with 1½" screws (with the rear of the bulkhead flush with the front of the curved opening for the cabin). Screws were driven in through the rear of the bulkhead and into the rear side of the gussets.

Next we centered the rear edge of the deck over the top transom stringer (after gluing joining surfaces), drove a screw down through the deck center and into the top stringer with the front of the transom held up against the rear of the deck panel. If a small adjustment in overall deck length is needed to position the transom against it, either trim the rear of the decking or add a batten between the transom and decking to make joining easier. Working out to both sides one screw at a time we pushed forward on the rear of the transom and down on the corner of the decking and drilled and drove in the screws to join the panels along this edge.

Fig. #8 shows a side view of the final positioning of the framing. The positioning of the curved gussets, such as the transom, and cockpit rear, is shown as it is at the midpoint. We cut the cockpit rear, as shown in Fig. #6 from ¾" plywood, noting grain direction, then attached a ¾" x 1" gusset under the rear deck following the rear edge of the cockpit cut out and ¾" behind it. The gusset was ripped with the edge on a 30° angle. The stringer at the bottom was mounted to the bottom by drawing a line squarely across the bottom 9½" aft of the rear bottom panel joiner. We drew a midpoint then hofted a curve with a batten, hitting the midpoint mark and two marks 23" out to either side and 11½" forward of the line. A 1" x ¼" stringer with its front edge cut on a 30° angle was attached by drilling seven holes every 4'5" down into the narrow top edge of the 46° stringer then attaching it with its angled forward edge lying along the curve line at one end. We pulled forward on the full end and attached the stringer in place driving 1¼" screws down through the holes in the ¾" stringer one at a time, as with the side stringers. We attached the rear cockpit panel by pushing back on the panel near the bottom and driving screws from the center out to the sides into the front of the bent bottom stringer. Next we glued joining surfaces then drove a screw through the panel and into the center of the top stringer. Then pushing down on the deck we drove screws about 4" apart through this panel and into the center of the stringer.

Fig. #8 also shows the construction of the bits that help hold the rear of the bowsprit while providing a handy cleat to tie off to. Before attaching these we cut the two stem gussets that are attached to the sides of the stem between the deck and bottom stringers. We ripped the gusset from a 4' clear fir 2x4 at a 45° blade tilt. The ends were trimmed by laying the ripped, but untrimmed gussets against the deck and bottom stringers and marking the trim lines to fit the gusset between the stringers. We marked a center line on both sides of the stem connecting the tips of the top and bottom stringers, then glued and screwed the gussets with their pointed edges along these lines and drove 1½" screws in through the angled edge into the stem, spacing screws about 4" apart.We cut the ends of the bits on a curve (as shown in Fig. #8 center) from both front and side to make a rounded end to each tip. To mount the bits we marked two square holes down on the deck as shown, then drilled a ¾" hole into each square, cutting out each hole with an electric sabre saw, cutting through the deck and center jointer. We slipped the shafts of the bits down into the position shown, slipped the crossbar into the notches, glued and screwed the shafts to the stem, then glued and screwed the cross bar in place.

The mast box was assembled from ½" plywood and 1x6 stock ripped to 4" wide. We cut the 1x6 stock front and rear walls, then cut the sides and reinforcing collars from ½" stock. We glued and screwed the plywood sides to the edges of the 4" wide stock, spacing screws about 4" apart and aligning the sides so their similar angles are opposite each other.

We used a square to draw a center line straight up the front of the framed bulkhead. Then parallel lines were drawn up 2½" out to either side of the center line. After clearing away any glue or stringer material with a chisel so the back of the box would sit against the front of the bulkhead centered between the lines drawn. We used a hand saw to cut across the 1x4 deck panel joiner about 9" forward of the bulkhead, then used a chisel to remove the joiner up to this point.

We trimmed off the rear edge of the collar around the top of the mast box up under the decking so that the collar would sit back firmly against the front of the mast box. We glued joining surfaces, held the box back in position and drove 1" screws in through the rear of the bulkhead spacing two rows of screws 3" apart with each row 1½" out from the center lines.

We used what we call the blind method for attaching the bottom collar around the bottom of the mast box to the bottom panel. Whenever using this method (when we couldn't reach both sides of the parts being assembled) we put the collar in position and draw around their outlines to mark placement. Then we removed the collar and drilled screw holes down through the bottom panel (without countersinking) within the placement lines just marked (spacing screws about 2" apart). The joining surfaces were glued then the collar was held in position and we re-drilled through the same holes from the bottom of the boat (countersinking) and drove 1" screws through the bottom and into the collar. The second bottom collar was glued and positioned down onto the first bottom collar and drove 1¼" screws down through the second collar and into the first.

The collar at the top of the mast box was glued and attached to the bottom of the deck, using the blind method to drive screws down through the deck, and into the top collar. To open up the mast box we drilled a ¾" hole in the deck center line and center line. Then cutting carefully we opened out this hole with the power sabre saw until the sides were flush with the inner sides of the box.

We're skipping ahead of Fig. #9 to Fig. #10, showing the positioning of the side ¼" panels. These panels were rough-cut to the approximate shape, allowing for easier handling while attaching. Before attaching these panels, we glued and attached the gussets with their pointed edges along these lines and drove 1¼" screws in through the angled edge into the stem, spacing screws about 4" apart.We cut the ends of the bits on a curve (as shown in Fig. #8 center) from both front and side to make a rounded end to each tip. To mount the bits we marked two square holes down on the deck as shown, then drilled a ¾" hole into each square, cutting out each hole with an electric sabre saw, cutting through the deck and center jointer. We slipped the shafts of the bits down into the position shown, slipped the crossbar into the notches, glued and screwed the shafts to the stem, then glued and screwed the cross bar in place.

The mast box was assembled from ½" plywood and 1x6 stock ripped to 4" wide. We cut the 1x6 stock front and rear walls, then cut the sides and reinforcing collars from ½" stock. We glued and screwed the plywood sides to the edges of the 4" wide stock, spacing screws about 4" apart and aligning the sides so their similar angles are opposite each other.

We used a square to draw a center line straight up the front of the framed bulkhead. Then parallel lines were drawn up 2½" out to either side of the center line. After clearing away any glue or stringer material with a chisel so the back of the box would sit against the front of the bulkhead centered between the lines drawn. We used a hand saw to cut across the 1x4 deck panel joiner about 9" forward of the bulkhead, then used a chisel to remove the joiner up to this point.

The sheer line (the line along the top of hull sides) is an important one for setting the look of the boat, so we took some time using a batten to loft a good, fair curve up to the bow, 2¼" above the deck. The decking can have not as fair a curve and it just wouldn't be noticed. But the sheer line has to be fair to have a pleasing look to the eye. We rabbeted a piece of scrap plywood to the deck, graduating from about 2" above at the transom to 3" above at the bow, using a batten and sighting down the line, changing it until it looked fair to the eye, gentle curve to the bow marked on the outside of the panel. We used a fine-tooth saber saw (cutting) as shown in Fig #10, then glued and attached the rails to the sides of the hull panels with their top edges lying along the sheer line just drawn spacing 1" screws about 6" apart. When attaching rubrails it's best to drive in screws about 3 feet apart to get a good curve, then go back and drill the rest about ¾" apart.

Before the glue dried we double-checked the look of the line from all angles, getting back 30 or 20 yards, where possible to get a good perspective on the hull. With the top rubrails in place, we used the power saw to trim off the side panels above the top rail. Then we marked and cut the forward hatch hole (shown in Fig. #16), top left). We cut two 24" 1x2s to fit against the inside forward panels, using the blind method to drive screws in through on the panels and into the 1x2s spacing screws about 4" apart.

We used the dimensions shown in Fig #10 to mark the path of the lower rubrails, mounted in the same way. The variance in spacing is so small at front that you can approximate the fore and aft placement of these marks. Again we used 1" screws and glue, driving screws from the inside of the hull out. At this point the hull should look about like it does in Fig. #10.

Now we're going to take a look at the various jobs left and see what choices we have, so the jobs can be filled around time schedules, weather, priorities, and so forth, to mention just a few considerations. The basic jobs left are: cabin built-ins, cockpit seats, fiberglassing, cabin structure, rigging, finishing, and sailmaking. The sequence in which these jobs are tackled can be varied in some cases. The hull could be flipped now while it's light and glassed before completing the rest of the woodwork. The cabin structure can be completed before or after the interior work, and the cockpit seats can be done after these with only a few problems reaching the gussets on the cabin bulkhead. (Driving screws in through the gussets and into the plywood, instead of the other way around solves this.) So the sequence can be altered if special considerations indicate they should.

Sometimes in building a prototype you have to reverse steps to make sure you're not getting off base as far as clearances, headroom, looks, etc. So we'll show the cabin built-ins before putting on the cabin roof because it's easier to do it this way, even though we put the roof on first in actual building.

Figs. #9, 11, and 12 show the layout we used inside the boat. On the starboard side, shown at top in Fig. #9, front to rear we have a shelf leading from the forward bulkhead back to a cabinet that houses a sink, then a cooler, stove, and sink, then a stove and a self-contained sink. This is shown also in Fig. #12 at top. If you have a 3-burner cooker, stove, and sink, it's best to measure it now to make sure it will fit, while holding a pencil against the other side of the sliding spacer to mark the curve on to the part.

The first step to making the portable toilet enclosure was to cut the aft wall to fit against the inner edge of the side panel joiner, as shown in Fig. #11, upper right. For mounting the built-ins to the inside of the hull we used 1" stock pieces ripped 1¼" wide, then mounted these with 1" screws countersunk down into the gusset about ¼" or so giving the screws a good bite into the ½" plywood of the hull without going all through. We cut the pieces as shown in Fig. #11, then used a square to line up the aft wall at right angles to the center line of the hull marking this placement.

Next we glued two adjacent edges of the 22" gusset, and attached it down to the hull bottom, then drove screws in through the aft wall to attach it to the gusset, as shown. Then we attached the vertical and top horizontal gussets to the aft wall on its forward side with screws driven through from the rear. We attached the vertical and top horizontal gussets to the forward bulkhead, facing aft. We attached the bottom gusset across the front of the enclosure. Next we cut the enclosure top, front, and shelf from ½" plywood, cut the 18½" gusset joining the top to the front. We attached the gusset to the rear surface of the front, flush at the top. Then we attached the top piece to the gusset, flush at the front of the plywood. The shelf was attached down onto the top horizontal gussets, a handle was attached to the front of the enclosure front panel, then the enclosure could be slipped into the space between the aft wall and the forward bulkhead to cover a portable toilet stored in the area. Obviously bathroom facilities are informal (we've seen worse in larger boats, though), but with the enclosure cover set on its seat next to the aft wall, making a wall across the cabin, a modicum of privacy can be attained. With a curtain hung across the front of the forward cabin rafter a separate head area can be created.

For a shelf that also holds the little table top, we first cut the shelf from 1x8 stock, angling the outside edge 27° to follow the hull side. This was mounted in the position shown, using the blind drilling and screwdriving method. Next, the corbel brace was mounted to the hull side using the blind method and with 1½" screws to the end of the shelf. Note that all shelves, walls, and counters help create an egg-crate framing to brace the hull side.

The table top slips into a slot between the bottom of the shelf and a plywood bracket. We used a ¾" spacer (cut from scrap 1" stock) so the top of the long piece of the bracket was ¼" below the bottom of the shelf. We glued and screwed the bracket to the shelf bottom with the spacer sandwiched in flush at the ends and front; with 1½" screws. We cut a curved railing (¼" x ¾") using the shelf as a guide, then drilled holes ¾" for the nine pre-turned railing spacers (scarfing) as shown in Fig #9, front to rear we have a shelf leading from the forward bulkhead back to a cabinet that houses a sink, then a cooler, stove, and sink, then a stove and a self-contained sink. This is shown also in Fig. #12 at top. If you have a 3-burner cooker, stove, and sink, it's best to measure it now to make sure it will fit, while holding a pencil against the other side of the sliding spacer to mark the curve on to the part.

The first step to making the portable toilet enclosure was to cut the aft wall to fit against the inner edge of the side panel joiner, as shown in Fig. #11, upper right. For mounting the built-ins to the inside of the hull we used 1" stock pieces ripped 1¼" wide, then mounted these with 1" screws countersunk down into the gusset about ¼" or so giving the screws a good bite into the ½" plywood of the hull without going all through. We cut the pieces as shown in Fig. #11, then used a square to line up the aft wall at right angles to the center line of the hull marking this placement.

Next we glued two adjacent edges of the 22" gusset, and attached it down to the hull bottom, then drove screws in through the aft wall to attach it to the gusset, as shown. Then we attached the vertical and top horizontal gussets to the aft wall on its forward side with screws driven through from the rear. We attached the vertical and top horizontal gussets to the forward bulkhead, facing aft. We attached the bottom gusset across the front of the enclosure. Next we cut the enclosure top, front, and shelf from ½" plywood, cut the 18½" gusset joining the top to the front. We attached the gusset to the rear surface of the front, flush at the top. Then we attached the top piece to the gusset, flush at the front of the plywood. The shelf was attached down onto the top horizontal gussets, a handle was attached to the front of the enclosure front panel, then the enclosure could be slipped into the space between the aft wall and the forward bulkhead to cover a portable toilet stored in the area. Obviously bathroom facilities are informal (we've seen worse in larger boats, though), but with the enclosure cover set on its seat next to the aft wall, making a wall across the cabin, a modicum of privacy can be attained. With a curtain hung across the front of the forward cabin rafter a separate head area can be created.

For a shelf that also holds the little table top, we first cut the shelf from 1x8 stock, angling the outside edge 27° to follow the hull side. This was mounted in the position shown, using the blind drilling and screwdriving method. Next, the corbel brace was mounted to the hull side using the blind method and with 1½" screws to the end of the shelf. Note that all shelves, walls, and counters help create an egg-crate framing to brace the hull side.

The table top slips into a slot between the bottom of the shelf and a plywood bracket. We used a ¾" spacer (cut from scrap 1" stock) so the top of the long piece of the bracket was ¼" below the bottom of the shelf. We glued and screwed the bracket to the shelf bottom with the spacer sandwiched in flush at the ends and front; with 1½" screws. We cut a curved railing (¼" x ¾") using the shelf as a guide, then drilled holes ¾" for the nine pre-turned railing spacers (scarfing) as shown in Fig #9, front to rear we have the following: 2" for the first one, 3" for the next seven, and 2" for the last one. The railing and posts were glued in place. A ¼" x ¾" PVC pipe leg was cut to fit between the table bottom and the hull bottom panel, one beneath it. The ends of the pipe were slipped over ¼" neoprene faucet washers screwed to the table bottom and joined directly over one another. We use large pillow cushions to sit back against the enclosure wall and cabin bulkhead when using the dinette table, the Japanese tea-house way.

To assemble the built-ins on the starboard side, seen at top in Fig. #12 we drew a line on the cabin floor 21" to starboard of the center line and parallel to it. We cut an 8" and a 44" length of ¾" x 1" gusset and mounted the short gusset forward of the bottom panel joiner ½" outboard of the line and parallel to it. The 44" gusset was mounted the same way ½" outboard of the line aft of the joiner. The counter front (2) was lofted, cut, and was screwed to the front (inboard) side of this floor gusset. (All counter parts were cut from ½" plywood.)

Then gussets were cut to fit in the corner of the rear of the counter front and the front of the cabin bulkhead, and in the center of the rear of the forward wall of the counter (D and the rear of the counter front. Next the two dividers (4) and (5) were cut, gussets were cut and screwed to the aft side of the aft divider and forward side of the forward divider along the bottom and front edges. The dividers were positioned behind the counter front 1" to the rear and 1" to the front of the cut allowing access to the stove at the front of the counter.

The forward wall of the counter was attached by cutting a gusset to fit between the bottom gusset of the front and the side stringer. This was mounted to the floor at right angle to the counter front. Then the forward wall was screwed to the end gusset of the front and the bottom gusset. Next a gusset was cut to fit across horizontally on the rear side of the forward wall from the counter front back to the hull side, level with the top of the counter front. A gusset was cut and fitted in the corner between the rear of the forward wall and the hull side. Then gussets were cut to fit along the top edge of the counter front (on its outboard side) from the forward divider to the forward wall and from the aft divider to the cabin bulkhead. A gusset was cut to fit onto the front of the cabin bulkhead from the back of the counter front to the hull side, level with the top of the counter front.

We cut a 56" gusset with one edge angled 27° and attached it with its angled side flush with the curved edge and angling in at the bottom. We used the blind method to drive screws in through the hull side and into the gusset on the curved edge of the top, spacing screws about 6" apart. Then we screwed the counter top down onto all top gussets.

We hinged the top covers of the cooler doors together then attached a narrow stop along the bottom sticking out at both ends about ½" into the counter area (see (3) in Fig. #12). Short 4" lengths of gusset here screw on as stops about 4" out from the center point, and sticking into the opening about ½". To open the butterfly-hinged doors we pushed down on the hinged center and the ends are pivoted up.

To mount a small, gimbaled gas stove, we cut a short length of 2x8 to the shape shown (6), then mounted it to the bottom of the counter top sticking into the cut-out area to center the stove in the open area, driving screws down through the top and into the 2x8. The slotted mount was screwed to the end of the 2x8 so the stove can be lifted out easily. The dotted area in (3) is the area reserved for a self-contained plastic pump sink with integral drain reservoir. These can be set into the counter top, or just held in place with brackets.

The cabinet door in the counter front was hung on ½" x ¾" brass hinges (same as the cooler cover hinges) attaching the door

CONTINUED ON BACK PAGE

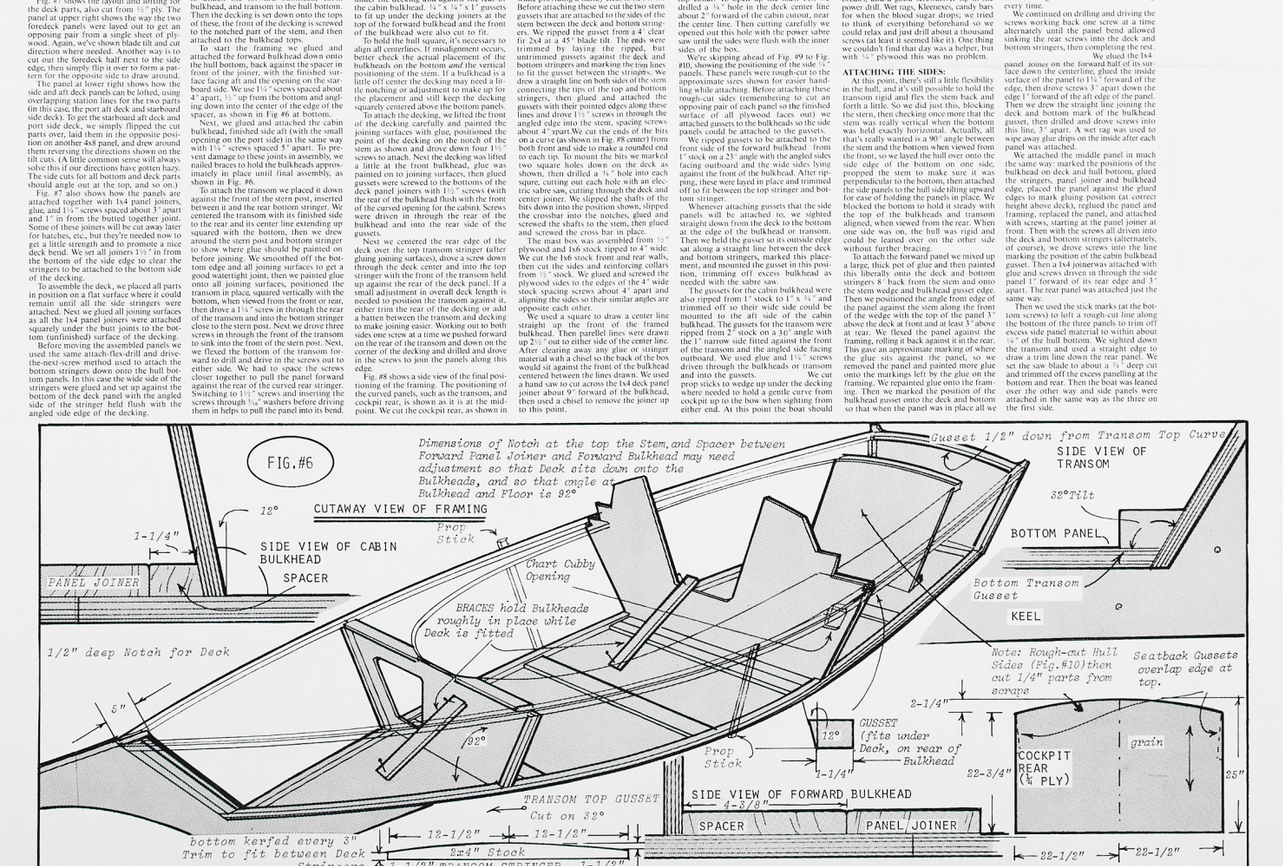

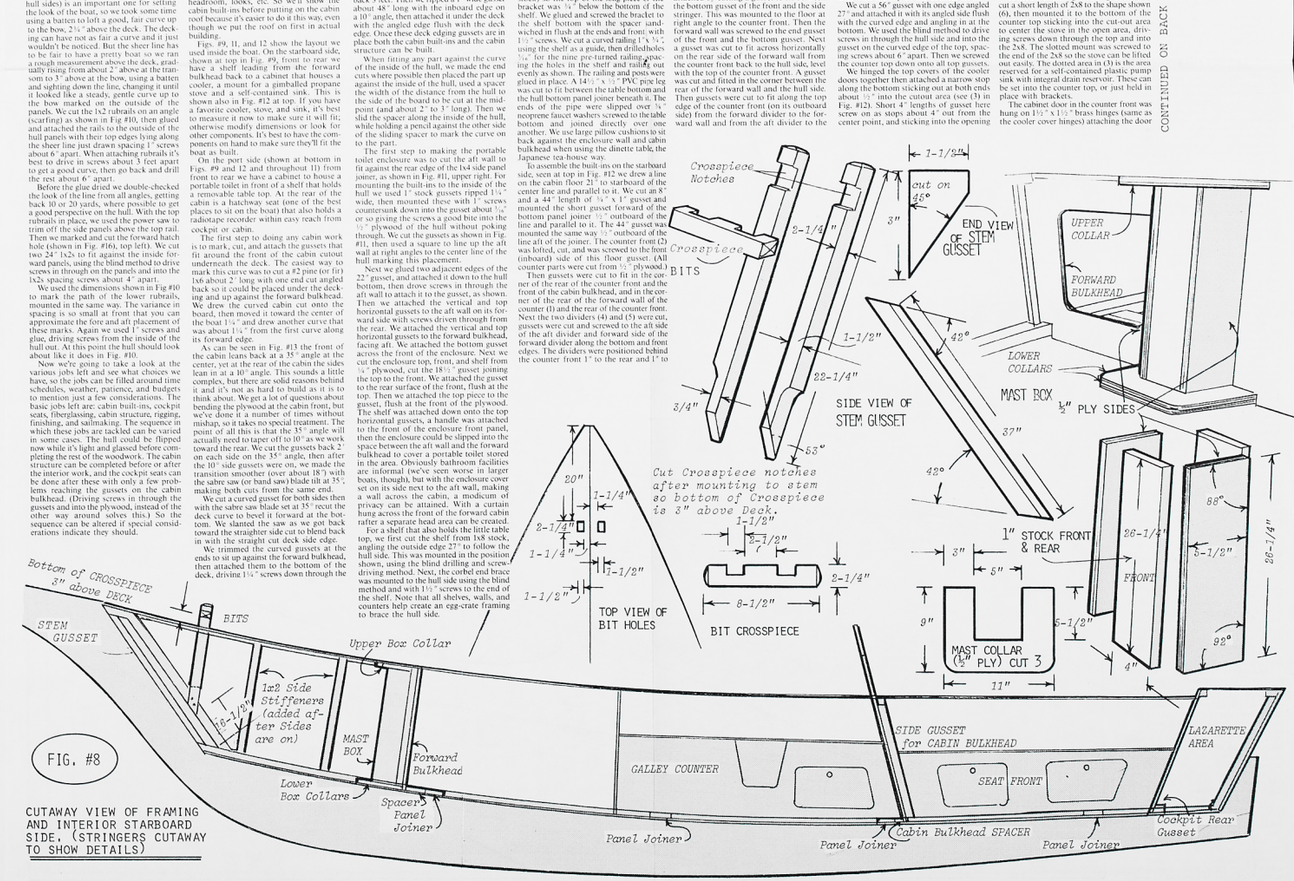

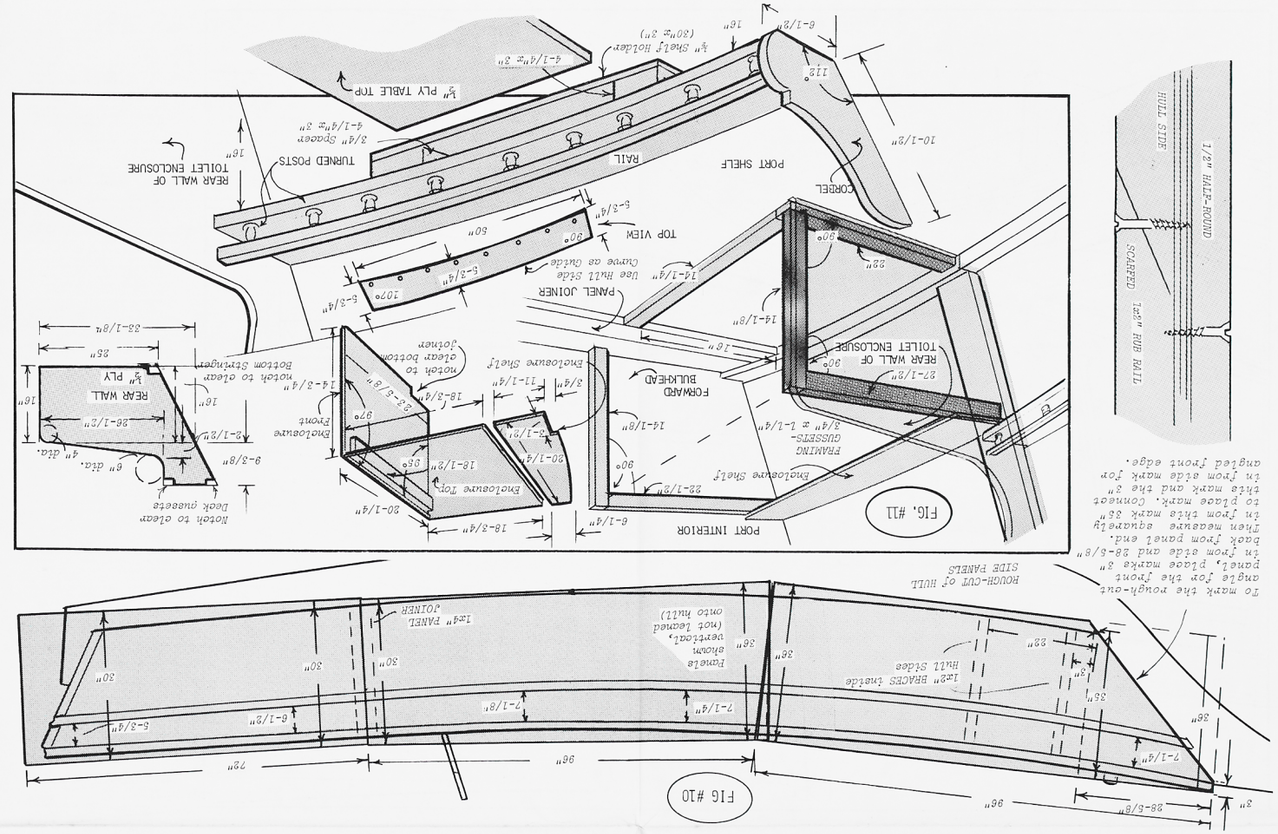

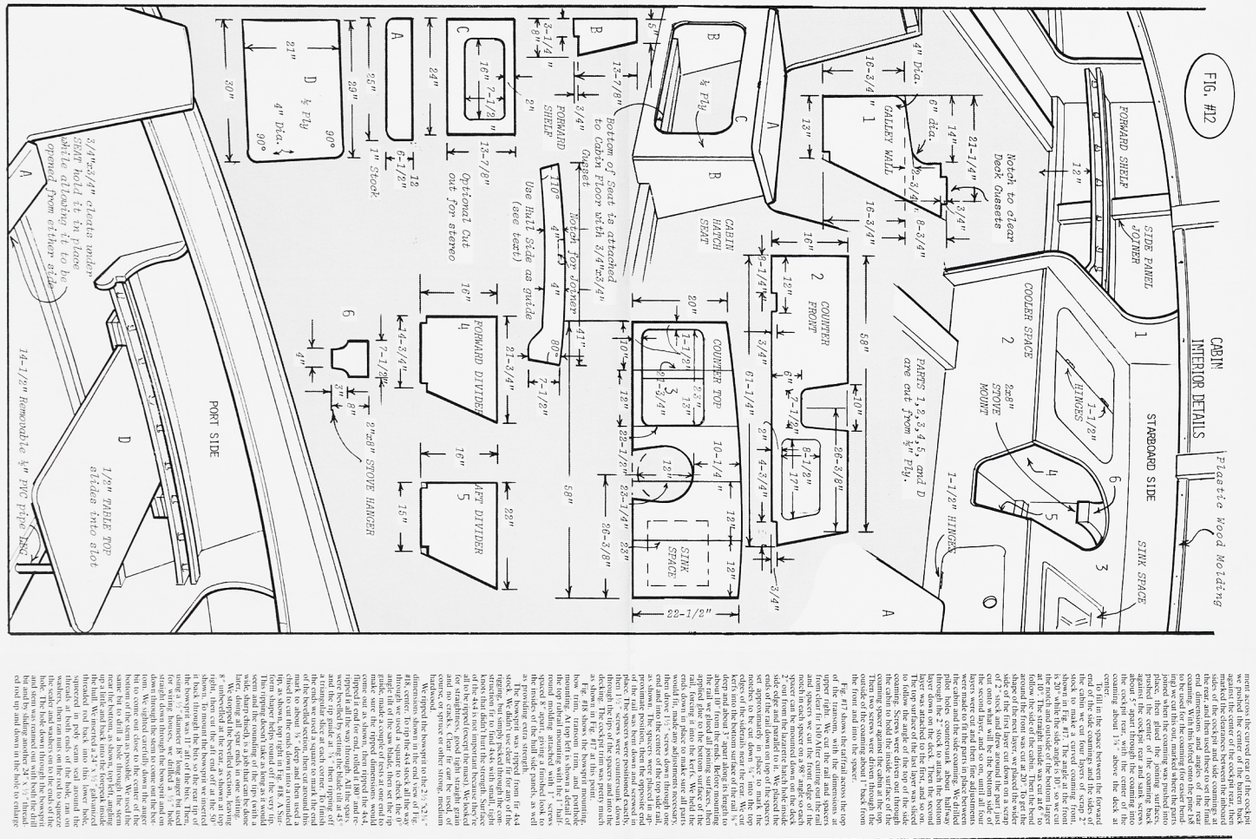



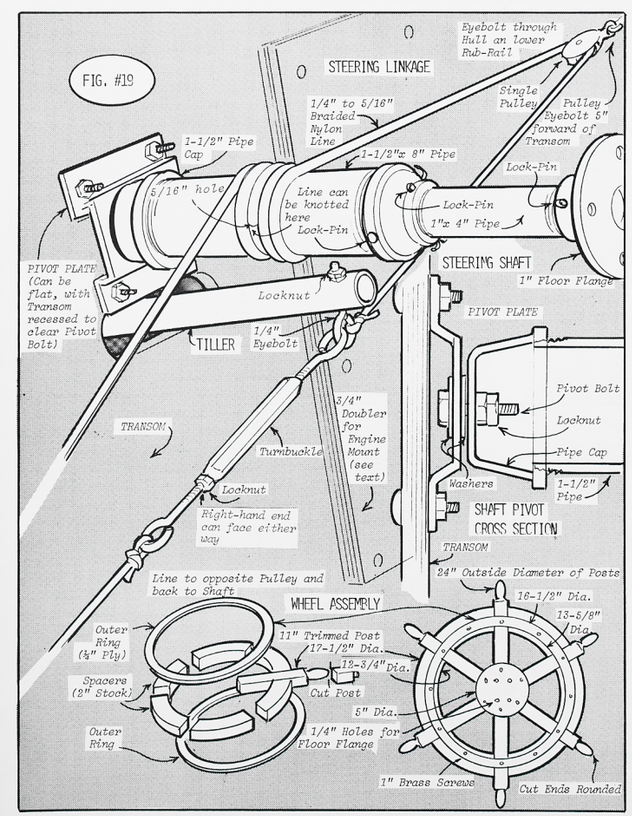



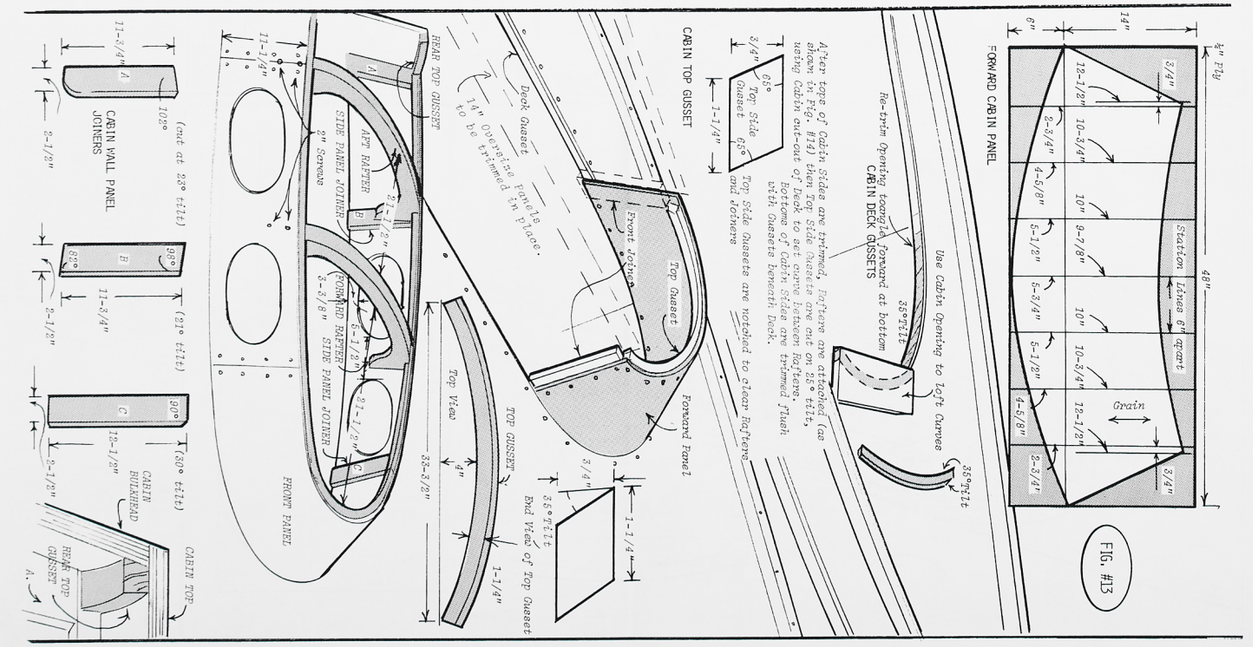

The front seat tops were cut and attach the same way. The cockpit seat tops were cut from 3/4" stock. We ripped the bottom edge on a 10° angle, marked the clearance for the inboard end of the coaming, then sawed the inboard edge on a 10° angle. The opposite edge was cut square. The seat was then set against the outside of the cabin hull/bead sticking outside the bottom of the coaming, aligned its rear end with the inboard side flush with the cockpit edge of the decking, we began drilling and screwing the seat down into the coaming and into the bottom of the coaming, spacing the screws about 6" apart. We screwed the inboard end of the seat down into the coaming, as we'd already done with the outboard end.

Then we drilled pilot holes for the gusset screws, and screwed the gusset to the coaming with 1" angled side facing inboard and its wide side down, drilling the holes into coaming and angling the hole down inboard so the screw would not protrude through the deck. To place flush with the cockpit edge of the decking. The last step was to recheck the plywood and to cut and attach those to the across the seat bottom. 1x2 cabinet door stops were cut and screwed to the rear of the coaming, about 1½" above the deck at the edges of the cabinet openings. Then the hinges and magnetic catches were set in place, and the doors were cabinet with the sabre saw. At this point we celebrated the fact that we'd finished about the last permanent plywood panel.

HATCHES.

The foredeck's hatch and lazarette hatch are the same size, 21" x 23", and are built the same way. First the hatch openings were marked out on the deck as in Fig. #16, was drawn into each corner, that is ½" inside the lines that marked the openings. These were cut either with a sabre saw from the outside, or with a saber saw from the inside. Then the corners were rounded off with a file. The lazarette curved cut from 1x2 stock. At the lazarette curved front and rear borders were cut with the saber saw. Then the curved edges were sanded smooth. Next, the hatches were cut from ¾" plywood as in Fig. #16, bottom. We attached the hatch boards to the deck flush with the sides of the openings. Next a length of 1x2 stock was screwed to the deck at the front edge of the hatch opening, measuring to where straight lines and the curves met. This piece was attached down onto the deck by driving 1½" screws up through 1x2. Then we cut the side pieces of the borders from 1x2 lightly over hung, sticking about ¼" and with their forward ends mitered. The side pieces were screwed to the deck and attached to the decking flush with the sides of the hatch openings. Then the forward piece was screwed and glued in place to make sure all parts would fit, make any adjustments necessary, and then remove the center piece. Next, the end and then the center of the top rail was bent down and screwed in place. Then the center piece was glued in position, then the opposite end was screwed down. To finish the hatch borders we used a scrap piece of 1x2 stock with beveled edges at each corner and were cut with the sabre saw.

The main hatch cover tops are cut from ¾" ply. as example 3/4" stock will be given length of 1" stock as shown in Fig. #16 at the hatch sketch, also with the blade in was ripped (shown down and to the left of the blade) to 5½" wide. Then the blade was set at 45° and the top was screwed to the ripped half the way through. All the spacers were beveled by setting the blade tilt at 45° a triangular slice at each corner. To finish mark to about ¾" deep and then used a ½" chisel to remove the waste. Then the top of the beveled section was sanded smooth. Next, the hatch was turned over and the spacers were screwed to the underside of the hatch top, using about 1" screws. Then the hatch was turned over and the edges were sanded smooth. Next, the hatch was set in place and the spacers were marked where they met the coaming. Then the hatch was removed and the spacers were cut off. Finish at the rear edge, the arched cut was made with the saber saw. Then the rear sides were attached. Finish up the hatch by sanding all sharp corners and edges, and then the hatch was ready for finishing.

We attached three hatch tops down onto the cabin top, spacing them about 4" apart. Then a length of side material, angling to meet the hatch top flush at the outside and the top was screwed to the cabin top. Next, the hatch tops were cut off flush at the rear edge, the arched rear sides were attached. Finish up the hatch by sanding all sharp corners and edges, and then the hatch was ready for finishing.

We ripped the bowsprit to the 2 - ¾2 - ¼" dia. example 3/4" stock will be given length of 1" stock as shown in Fig. #16 at the hatch sketch, also with the blade tilt at 45° was ripped (shown down and to the left of the blade) to 5½" wide. Then the blade was set at 45° and the top was screwed to the ripped half the way through. All the spacers were beveled by setting the blade tilt at 45° a triangular slice at each corner. To finish mark to about ¾" deep and then used a ½" chisel to remove the waste. Then the top of the beveled section was sanded smooth. Next, the hatch was turned over and the spacers were screwed to the underside of the hatch top, using about 1" screws. Then the hatch was turned over and the edges were sanded smooth. Next, the hatch was set in place and the spacers were marked where they met the coaming. Then the hatch was removed and the spacers were cut off. Finish at the rear edge, the arched cut was made with the saber saw. Then the rear sides were attached. Finish up the hatch by sanding all sharp corners and edges, and then the hatch was ready for finishing.

We attached three hatch tops down onto the cabin top, spacing them about 4" apart. Then a length of side material, angling to meet the hatch top flush at the outside and the top was screwed to the cabin top. Next, the hatch tops were cut off flush at the rear edge, the arched rear sides were attached. Finish up the hatch by sanding all sharp corners and edges, and then the hatch was ready for finishing.

The bowsprit was ripped from 4x4 stock. We didn't use clear for any of the parts that would be painted, since we could use cheaper stock with a few knots. Then we cut

it a little so the rod could be slipped in easily. We drilled a ⅜" hole down through the bowsprit 1½" aft of the ½" hole near the center. We used a chisel to enlarge this hole on the bottom of the bowsprit to about 1" diameter so a nut can be countersunk into its bottom side.

For a club-foot (controlling the bottom of the jibsail) we cut a 83° length of 1½" x 2½" oval hand rail molding then rounded its ends. We drilled two ¼" holes down through the center of the wide side 2" and 3" from the rear end. Then we drilled a ¼" hole to about 3" deep into the center of the forward end.

To link the forward end of the club to the bowsprit we used a vise or channel-lock pliers to open up a ¼" x 4" screw eye, then slipped a ¼" x 5" eyebolt and re-closed the screw eye. The eyebolt was bolted to the bowsprit just aft of the ½" hole, with its nut recessed into the bottom of the bowsprit. A ¼" x 6" eye bolt was inserted down through the hole near the front of the bowsprit.

A chain was mounted extending up from the threaded rod at the base of the stem to the threaded rod striker and from there on up to the eyebolt at the front of the bowsprit, to keep the front of the bowsprit from lifting under tension from the pull of the sails, we used galvanized chain with links made from ¼" rod stock. To fit the links over the ½" threaded rods we placed the link to be enlarged in a vise with its ends against the jaws, then closed the vise a little until the sides of the link spread enough to fit over the threaded rod.

We spread the rear link this way, slipped it over the stem bolt and fastened with a wide washer and nut. We pulled the chain up to the bottom of the striker, marked the link to be spread, removed the chain, enlarged the link, replaced the chain at the stem, slipped the link over the striker, pulled the end up to the bottom end of the eyebolt at the bowsprit end, then cut off excess chain. The forward end of the chain was held onto the eyebolt with a wide washer and nut. Then the nut on the striker was run down toward the end to tighten the chain taut. A safety nut can be run onto the bottom of the striker just to hold it in place when removing the striker, detaching the ends of the chain, but leaving it on the striker for convenience.

We used the pattern shown in Fig. #18, center, to draw the portholes outlines onto cardboard, then marked another larger pattern onto another piece of cardboard. The larger pattern was then cut from ¼" plywood with the grain aligned with the long axis, drawing eight porthole frames. Then the smaller pattern was used to draw the inside of the portholes centered inside the large patterns. The larger pattern was used to draw the outlines onto ¼" plexiglas clear plastic. We drilled ¼" holes inside each porthole frame, near the inside of the smaller patterns. Then we took our time to cut out the insides of the frames with a sabre saw. Next we cut the frames out from the plywood panel and sanded the frames to remove splinters and to round off the two side edges a little.

The cross section at right in Fig. #18 shows how the layers of the portholes were stacked. We used a sabre saw or (preferably) band saw to cut the portholes out from the ½" plastic. To drill and attach the layers we laid all parts out with each plastic part grouped with two frames. We assembled the frames on both sides of each plastic, then used a felt tip pen to mark on the inside of the frame and the plastics into groups, placing a single dot in the lower right-hand corner of the first group, two dots on the second and so on. Then we marked the sides of the holes in all the frames the same way so that once the bolt holes were drilled, we'd know exactly which frame belonged with which plastic part at which hole through the cabin. It saves much time, especially later on to mark these parts. We stacked the frames, aligned and drilled the ¼" holes as marked. Then we restacked with the plastic sandwiched in between and very carefully, without ever getting rushed and not pushing hard on the drill, we drilled the holes on through the plastic (which will always split if you don't let the drill take its own time getting through). Next, we placed each frame against its hole in the cabin, and used the frame as a template to drill more holes through the cabin wall. ¼" x 1¼" brass bolts were inserted through the frame, through the plastic, through the outside of the cabin, and through the frame on the inside of the cabin, then bolted tight. We hadn't had a lot of problems with the ports leaking, but to be on the safe side, in the final mounting of the ports (after finishing, painting, and varnishing), a bead of sealer can be run around the outside in the hole cut in the cabin just before final mounting.

The trailboards, shown at left in Fig. #18 were cut from 2x6 stock. We rounded down the edges of these and mounted to the hull side panels and to the sides of the stem with ⅜" x 4" lagbolts and washers at the front and ¼" bolts at the rear. We've heard about as many explanations for the real purpose of these trailboards as the number of people asked. But functional or not, we think they add a lot to the look of the bow, they give you a little broader base to stand on when fiddling with the jib while underway, and they can provide a perfect surface to put license numbers on (although we painted on some scroll work, just for looks). We ran a length of non-skid tape on their top edges.

The arched molding connecting the lower rubrails across the transom was cut from 1" stock, then carefully sliced to about ½" thick. This was screwed to the transom, then the side rubrails were cut flush with the rear of this molding and rounded off a little at the corner.

We used a spade bit to drill two 1½" diameter holes through the transom with the *centers* of the holes 3" apart and 16½" up from the base of the stern post.

Fig. #21 shows the construction of the rudder box and the mounting of the whole steering gear. Some builders of the smaller versions of the boat simplified the steering gear by cutting a slot in the cockpit rear so a simple tiller handle, extending the one attached here, could be reached in the cockpit.

We prefer the steering wheel set-up because it's really high-geared, acting like a vertical tiller that doesn't take up much cockpit space, yet still has plenty of "feel." We've never had problems with this simple steering gear, but if anything *did* break, there's the option of reaching the stub tiller inside the lazarette in a pinch. If *all* else failed, we have a hole near the rear of the rudder box that can take a length of line so the boat could be steered by rope through the ruder box, knotted and led up both sides of the hull.

Having a boat that can be beached changes everything and not only allows a lot more fun, but defuses a lot of situations that would be dangerous in a keel boat. So we went to the extra effort to mount a pivoting rudder, and to do this we started with the rudder box.

We marked the shape onto ¼" ACX plywood (the curves are just for looks and can be freehanded). Then we cut one out, flipped it, and drew the other side to be cut out. We ripped a 1" x ¾" spacer about 3" long and another 1½" x ¾" about 2" long. We attached these spacers with their ¾" against the joiner (unfinished) side of the rudder box. We placed the first spacer flush with the front, vertical side edge of the box side and attached this with glue and 1½" screws spaced 3" apart. The second spacer was attached perpendicular to this one, 8¼" up from the bottom, as shown. The second vertical spacer was attached above this. Then the rudder was cut from clear fir 1x12" stock as shown in Fig. #21 center. After cutting we drilled the ¼" pivot hole, the 1" knot-hole, and the ⅜" line hole leading from the edge of the rudder directly into the center of the 1" hole from the side. The rudder box side with spacers attached was stacked directly on top the other side and the ¾" pivot hole was drilled through both in the position shown. Next a 3' length of ¼" braided nylon line was inserted through the hole in the edge of the rudder top and into the 1" knot hole where it was pulled through, knotted, wrapped in tape, then inserted back.

The rudder was laid onto the inside of the rudder box, as shown in Fig. #21 lower left. Then a ¼" hole was drilled so the line could be led through the horizontal spacer above the rudder. The 2½" wide strip was attached to the front of the front vertical spacer flush with the sides of the box. Then we carefully drilled a ¼" hole so a 15" length of ½" galvanized pipe could be inserted into the front of the box, flush with the top line of the box side and parallel to it. A ¼" hole was drilled at the same angle through the second vertical spacer to the rear. The 2½" wide cap piece at the very top was cut, as seen in the side view, with its ends angled to follow the vertical front and top of the rear curve.

The edges of the rudder extending below the rudder box (shown at bottom left in Fig. #19) were tapered to the cross section shown. This tapering doesn't take as long to carry out as it would seem, and it's very important, not only for speed, but for control. An untapered rudder creates a lot of turbulance that prevents the water flow from "grabbing" the rudder and allowing it to turn the boat. To taper the rudder we drew a center line around the edges to be shaped. Then we just slipped the rudder under a leg while sitting on a hard chair and used a Surform shaper to shave the center edge down in a curve down to near the center line.

The cap board "E" was screwed temporarily to the top of the box side, then the tiller pipe was inserted through the holes near the top and we drilled down through the pipe with a ¼" bit to drill holes through the pipe 1½" apart, as shown in the side view. We continued the holes on through the sides of the box. Then a ¼" hole was drilled down through the cap board angling a hole down through the cap so it extends down between the pipe and the side of the box and into the interior. The rudder rope was inserted up through this hole so when the rope is pulled at the top of the box, it causes the rudder to rotate, locking it down when sailing by tying it off to the cleat on the cap board. We raised the rudder to its up position, then slipped a ¼" through the rudder at the hole near the rear of the rudder box so a pin could be inserted through it to lock the rudder up for launching. With this rudder pull-down functioning smoothly, we glued the joiner surfaces and attached the second rudder box side down onto the ¾" edges of the spacers. We flipped the assembly over and drilled the two ¼" holes on down through the box. We drilled a ¼" hole vertically through the tiller pipe ½" back from the forward tip. To trailer, we untied the knot in the rudder, tied the rudder line in a loop, and carried the rudder in the boat.

We made aluminum strap hinges from 1½" x ¼" straps by cutting the straps to the lengths shown, then bent their centers back around a ½" pipe and fastened them over the front of the rudder box and the rear of the stern post. We slipped the rudder post, then with a sharp chisel, recessed this area ⅛" below the surface, replaced the straps and drilled through appropriately as shown. With all bent straps in place, we positioned 2" scrap stock for filler pieces under each bent strap, up against the rear of the stern post or back against the front of the rudder box, and drew the outline of the filler inside of the curve onto the wood. This was cut, then tapped in place inside the bend of the strap. We drilled ½" holes through these filler, on the center line of each filler with the center of the hole ½" in from the center of the curve as shown in Fig. #21. Before drilling the hole through the top filler we removed it, drilled a 1" diameter hole down ½" with its center ½" back from the curve at the front. After trimming the top side of the top straps with the hacksaw to follow the top edge of the box side we removed the mount bolts for the tiller pipe, and measuring the placement on the first side drilled carefully, drilled ¼" holes through the top strap, through the existing holes in the box and pipe, then on through the opposite side. We placed a ½" nut in the recessed top of the upper filler, placed the filler/strap back in place on the rudder box and bolted through. With all the straps in place, we threaded a 24" x ½" threaded rod up through the holes, as shown, and into the top nut recessed into the upper filler. We ran a nut onto the bottom of the threaded rod up to the bottom filler, then cut off the rod flush at the bottom. If needed, the fillers can be permanently attached inside the straps by drilling a ¼" hole through the strap and into the filler, then driving in ¼" x #7 screw. A cleat was screwed to the top cap of the rudder box so that when getting underway, we reached over the back of the transom, pulled up on the line coming out of the top of the rudder box to lock the rudder down, then tied this line off at the cleat.

Fig. #21 shows a side view of how the steering column was assembled from galvanized pipe parts and mounted in place. We used an 8" length of 1½" galvanized pipe (I.D.) for the spool that the steering line was wrapped around. To assemble this steering column we first drilled a ⅝" hole through the center of the end cap (shown in Fig. #19 at right). We used a 4" length of channel iron for a rear bearing for this column, (although a flat plate with a recessed hole drilled into the transom to clear the bolt head would work just as well if a channel is hard to find). We drilled a ⅝" hole through the center of the plate, then drilled ¼" mounting holes for the plate about 3" to 4" apart. A ⅝" x 2" bolt was inserted through a washer, forward through the plate, through another washer, and through the end cap center hole, and through another washer. A nut, then a lock nut, was run onto the bolt inside the end cap and these nuts were tightened against each other to prevent loosening while allowing free rotation of the end cap. A little slop is better than a little tight in this case. A ⅝" hole was drilled through both sides of the 1½" pipe 4" back from the front end. Then the rear end was threaded into the pipe cap and tightened firmly. A 1½" to 1" reducer was threaded onto the front end of the 8" pipe. Then a 4" length of 1" pipe was threaded into this and a 1" four-hole floor flange fitting was threaded onto this. All parts were threaded on firmly with a large pipe wrench. Then ¼" cotter pin holes were drilled through at both joints of the adapter and at the floor flange fitting, drilling in through the "hub" that the pipe wrench grabs to prevent any unthreading of these fittings once the cotter pins are in through those holes drills through both adjacent parts. Actually, we used galvanized 3½" nails for lock pins, inserting one through the joints of the adapter and the flange and bending it over.

The steering column was unthreaded at the joint of the 1½" spool and the adaptor, and the floor flange was loosened for easy removal as well.

We used a 1¼" hole saw attachment for the power drill to bore a hole through the rear cockpit coaming and cockpit rear side at the position shown in Fig. #21 top right. We soaked the wood grain in the hole with motor oil with repeated wettings as the boat was finished, making a naturally self-lubricating bearing surface. Next, we removed the floor flange, unthreaded the larger pipe from the adaptor, then reached in through the lazarette and inserted the 4" pipe out through the front of the bearing hole. We inserted the larger pipe spool into the lazarette then threaded it back into the adaptor. The rear bearing plate was placed centered on the front of the transom with its pivot bolt 2¼" above the top of the tiller pipe. Then the mount hole positions of the plate were marked on the transom, the column was removed, the holes drilled, the column was replaced, the four 1½" x ¼" bolts were inserted through the transom and plate from the rear, and nuts were run on tight. We placed a pipe wrench on the spool inside the lazarette, and on the pipe shaft sticking forward at the rear of the cockpit, then tightened down the threads until the lock pin could be inserted all the way through the fittings and bent over. The floor flange was run lightly onto the threads of the shaft at front.

To keep out water a boot cut from inner tube rubber can be tacked around the hole in the transom, gathered around the filler pipe, and clamped to it to keep water from splashing in, (although to be honest, we've had the boat out in pretty big seas, and never took a drop in through this hole).

Fig. #19 shows the way the steering cable was run. The first step to rigging the steering was to open the ¼" x 2" tiller eyebolt in a vise, slip on a 5" shaft turnbuckle with an extra locknut run onto the right-hand threaded shaft of the turnbuckle. The eyebolt was inserted up into the tiller pipe and then attached with the nut and locknut tightened (a locknut is important). Next we opened up two ¼" x 4" eyebolts and slipped single pulleys for ¼" – ⅝" line onto these and reclosed them. We drilled ¼" holes in through the center of the lower rub-rail, 5" forward of its rear on the outside of the hull. We reached in the lazarette and inserted the pulley eyebolts out through these holes through the side of the boat. A washer was slipped onto the eyebolt ends, then a wing nut was run about ½" onto these eyebolt ends. We inserted one end of a 10' length of good, braided ¼" nylon line down through the hole in the spool pipe and pulled this through to the mid-point of the line. We took one end of the line, tied a knot right next to the spool pipe from the hole. We wrapped the line around the spool clockwise (facing aft) twice, then the line was led out to the port pulley, then back to the eyebolt on the tiller where it was temporarily tied off at the eyebolt. The other end was knotted next to the spool pipe then wrapped twice counter-clockwise, working toward the rear from the hole. This line was led through the starboard pulley, then up to the turnbuckle extending nearly to its full length.

We've used ¼" nylon steering line for many years and have found it really durable. Its biggest drawback is that it stretches at first. Once the stretch is taken out, it stays stable, but for the first few sails we had to check the tension before each sail. There are two ways to take up the slack when underway; tighten either wing nut on the outside of the boat, or tighten the turnbuckle. After using all three to take up slop, we reset all the adjusting nut to maximum length then re-tied the line to the turnbuckle. The extra nut on the turnbuckle locks in the setting.

For the smaller version of the boat we couldn't find a steering wheel the right size, so we built one and found it to be a simple, fun project, using pre-turned posts available at lumber yards. We cut two hub disks and two rings from ¼" plywood. Then we cut segment spacers from 2" stock, cut off the end of the posts and shaped down handles, as shown in Fig. #19. Then we stacked the parts, glued the joints and screwed the hub discs to the posts near the center then placed the spacers and drove screws in through the rings and into the spacers and posts, then flipped the wheel and repeated to attach the other ring. However, for this boat we need a bigger 24" diameter wheel which we found available at swap meets and brass supply stores. These are well made, but poorly varnished mahogany wheels with brass hubs from Taiwan. We paid about $24 for ours which seems like a good investment and a nice finishing touch. The wheel was attached to the floor-flange at the front of the steering shaft by drilling four ¼" holes extending through the wheel hub so that 3" x ¾" rounded head bolts could be inserted through the hub and back through the holes in the flange.

Fig. #20 shows some of the finishing procedures. At this point the rough cut hatch cover trim on the cabin and bowsprit then rolled the boat and began bottom finishing. We used a Surform shaper and some sanding belts in the sander to round off all corners at the chine and transom. We removed and re-countersunk any screws that appeared to be sunk deeper into the wood surface. We used catalyzed polyester auto body putty to fill in low points and rounded out the corners of the hull, at different points in the finishing process. The basic process is to knock off only the high points, fill in only the low spots and end up with a smooth hull. Sounds easy, but some times we end up spending time adding more high points and grinding extra spots that were not careful. Even in finishing, a little slopped cure can save a lot of time and elbow grease. We used "Cuz" auto body filler as well as "Bondo." These are medium-density fillers and are forgiving to work with while providing a good, tough surface.

We mixed the filler putty on clean palettes about the size of a large book. Something smooth like masonite makes a perfect mixing board, and if kept cleaned, it can be used over many mixes. We used 1½", 3" and 6" putty knives for different applications. We also used an old covered plastic bucket with 2" of acetone in the bottom to store the knives in between uses. A clean putty knife is the only hope for a good, quick filling job.

We'll take you through a typical mix. We used a stick or a special putty knife to ladle out a wad of putty (after mixing the resin to get the thick stuff off the bottom) about the size of a thick pancake onto a piece of cardboard, then added a dollop of catalyst to the ladling stick. We go over the section of the boat to be filled, cleaning off all dirt with a rag and making a plan of action so we start filling the biggest gaps or holes first, ending up filling over-shallow screw heads later, as the putty begins to lose its workability.

The more colored catalyst mixed in, the faster the putty will set up and the shorter working time we'll have. Sunlight and heat both act to shorten the time it takes to harden (or "go off" as they say). We've come to prefer to work quickly with a fairly "hot" mix (a lot of catalyst) mixing just as much putty as we're sure we can use; (small, hot mixes in other words). With mixes that take a long time to go off, we end up standing around with nothing to so; so we mix another batch before shaping the first and things really get confused. So we try to stick with one mix at a time. Make sure our Surform shapers, flat and rounded, are there. (We like to use them without handles.)

We squirt two lines of catalyst about 3" long onto the putty and start to mix with quick figure-8 motions, turning the mix often and cleaning the knife on the edge of the pallette often. This is dead time, time we spend actually applying the putty, so we work fast. The putty should be fairly rich in the color of the catalyst, not just a colored grey, but more a greyed color (blue or rust) of the catalyst. We keep the putty out of the sun as there is no time getting the putty to the boat. When working with catalyzed polyesters, you learn to run on the job. We fill in the large areas leaving a lump where there was a low spot. We don't try to smooth the putty to surface level, but just cover the low spots or gaps without leaving too thick a spot. As soon as the putty starts to lose its smooth workability and begins to show signs of curdling like cottage cheese, we move to the smaller, shallower applications like screw heads.

When it's really cottage cheese-like, we take the opportunity to clean off all tools, the putty knives and palette, dumping the waste. For final cleaning of the knives we use the acetone, storing the knives and starting to think about shaping the putty down to surface.

Before the putty has really cured it will have almost no adhesion to the surface (good time to clean up spills). After its really cured it will be almost too hard to shape easily, so we want to catch it during the period of ten minutes or so when it shapes like jack cheese, and you can remove huge lumps down to the surface in a remarkably few strokes of the Surform shaper. These shapes are sometimes sharp, sometimes not so sharp, so try to buy a couple, hoping you'll get a sharp one and guard it. We began to pick at the putty, especially the thin spills or cleaned off pieces, to see how it's going off. When we can scratch it and leave a white mark with our fingernail, it's ready to shape without too much fear of knocking the whole lump off the boat. We work first shaving the large lumps from the high points down, following the contours of the boat with our strokes rather than the contours of the lumps. Again, we work on the largest areas first.

At all corner joints of the hull (the chine and transom) putting was worked well into the cracks and gaps to provide a strong, smooth edge along the sides of the hull bottom for the laminations to adhere to.

On this hull, we started filling in the curves between the hull bottom and the side of the keel/stem to about a 2½" – 3" diameter (about like a drink can diameter). We shoved the putty into the corner, then use the bottom end of the can to pull along a nice radiused corner. Some people use pieces of cardboard cut to shape as templates or plastic spatulas cut to the arc wanted. When shaping filled, radiused curves like this, we try to leave a nicely shaped corner, as those inside corners are harder to grind on later. We filled the keel corner all the way down the stem, across the bottom, and back up the stem pos of both sides. Then we filled and shaped the low spots around all butt joints, then any other low spots filing the chine and transom and all screw heads.

If the putty is shaped quickly and well, there won't be heavy grinding, but if there is we'd rent a belt sander for a day before tackling it with hand sanding.

We used the Surform (although a large router would help) to round off the corner edges of the keel bottom and stern front. We left the stern post rear edge as it was. When the hull exterior was smoothed, the inside corner of the keel and hull bottom filled, and the keel bottom and stern front rounded, we started to think about glassing the outside. We covered the entire keel and hull up to the bottom of the lower rubrail with standard 8 ounce fiberglass cloth. Underneath this we ran a layer of fiberglass mat. After the lay-up of the mat and cloth, a second hot-coat of resin was applied.

If this is the first time working with fiberglass there are a few rules that make the job more sure-fire. As with the filler putty, the more catalyst, the faster it goes off. But with fiberglass resin you have a little less warning and having it go off too soon is more of a problem than with the putty. The whole basic approach with fiberglass that we use is to try to have everything possible on your side. Have all preparations ready, all tools close at hand, work with best conditions, do everything possible beforhand so once the catalyst is stirred in, all you have to think about is getting a good wet-out on all laminations.

Here's how we carried out the plan. First we shoved down roll can to pull along the stem, across the bottom, and back up the stem pos of both sides. Then we filled and shaped the low spots around all butt joints, then any other low spots filing the chine and transom and all screw heads.

If the putty is shaped quickly and well, there won't be heavy grinding, but if there is we'd rent a belt sander for a day before tackling it with hand sanding.

We used the Surform (although a large router would help) to round off the corner edges of the keel bottom and stern front. We left the stern post rear edge as it was. When the hull exterior was smoothed, the inside corner of the keel and hull bottom

CONTINUED ON PAGE 8

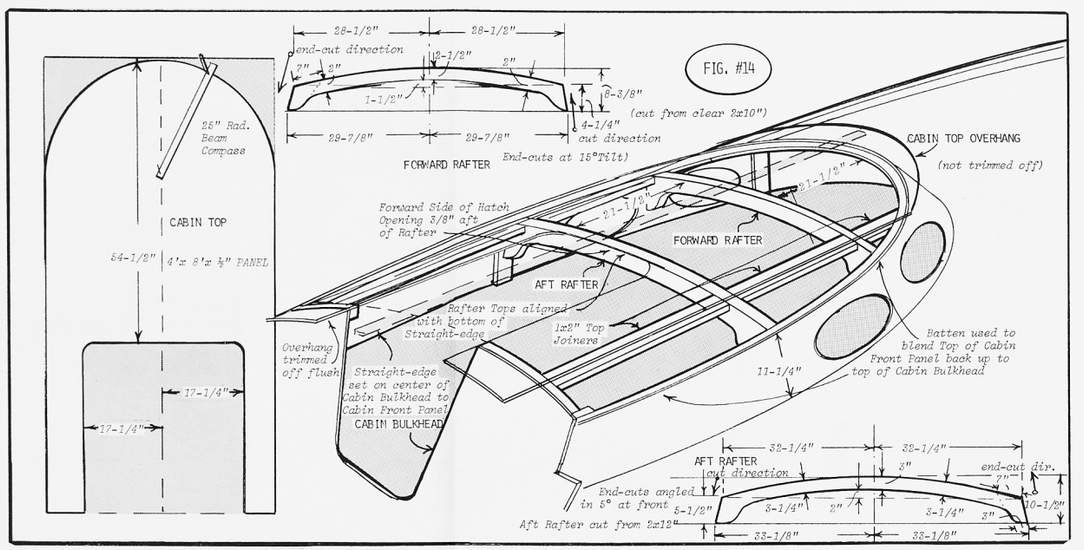

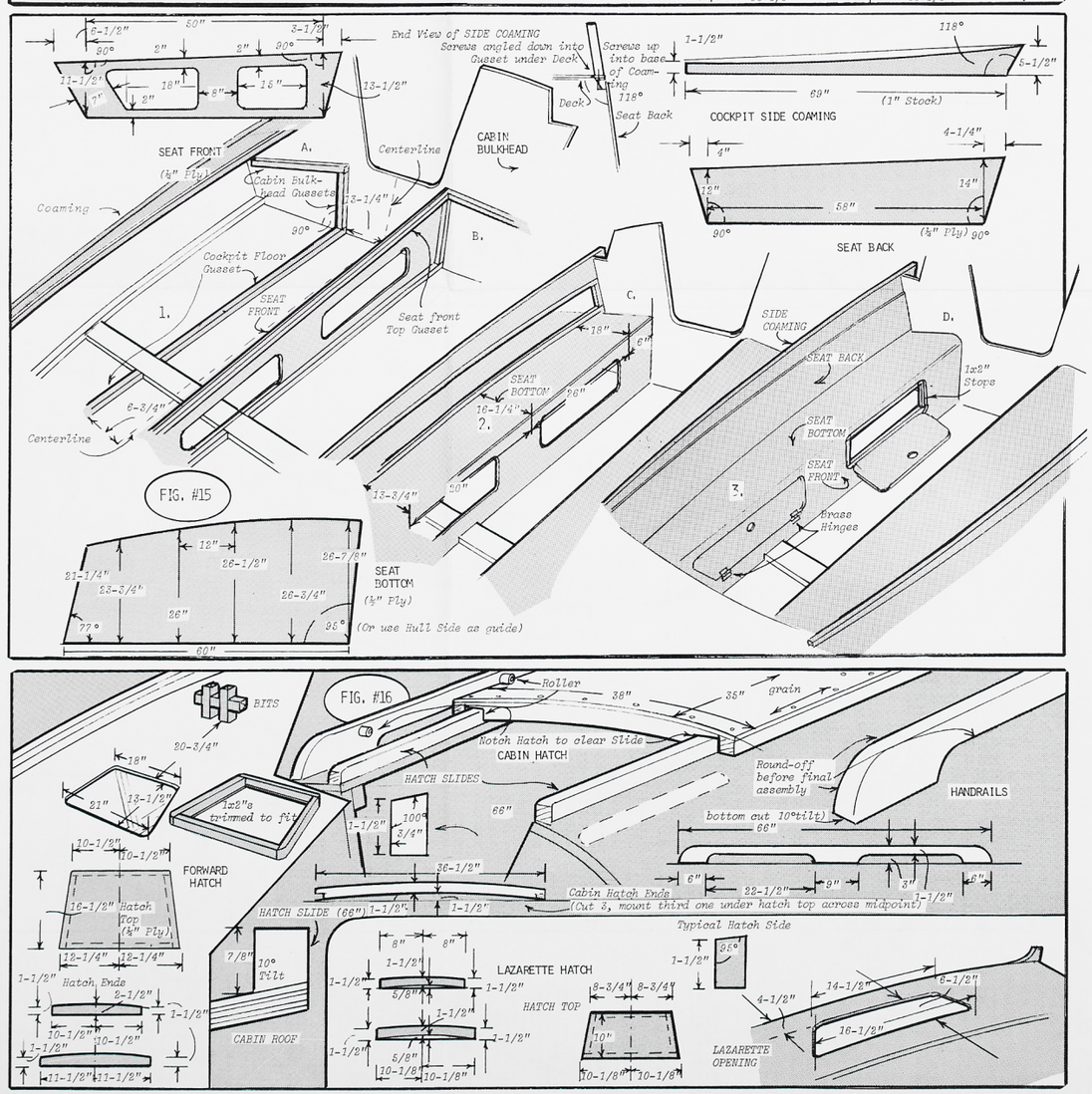

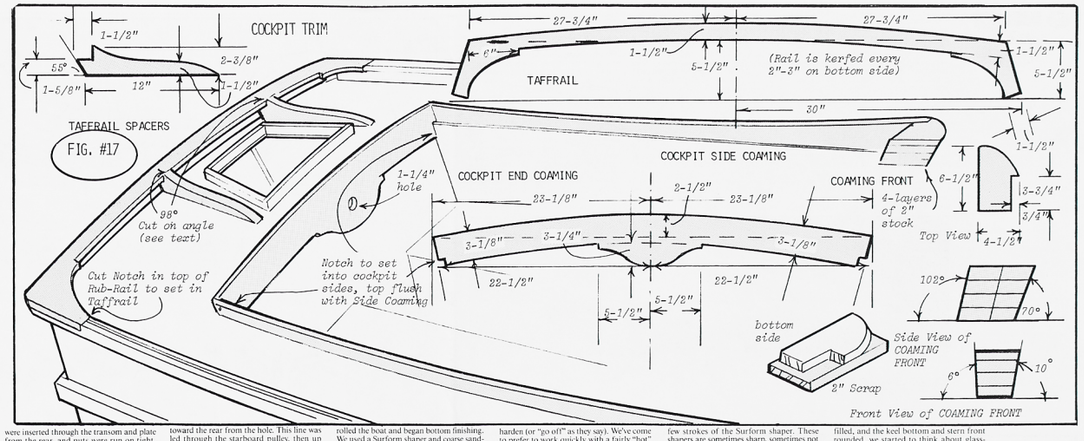

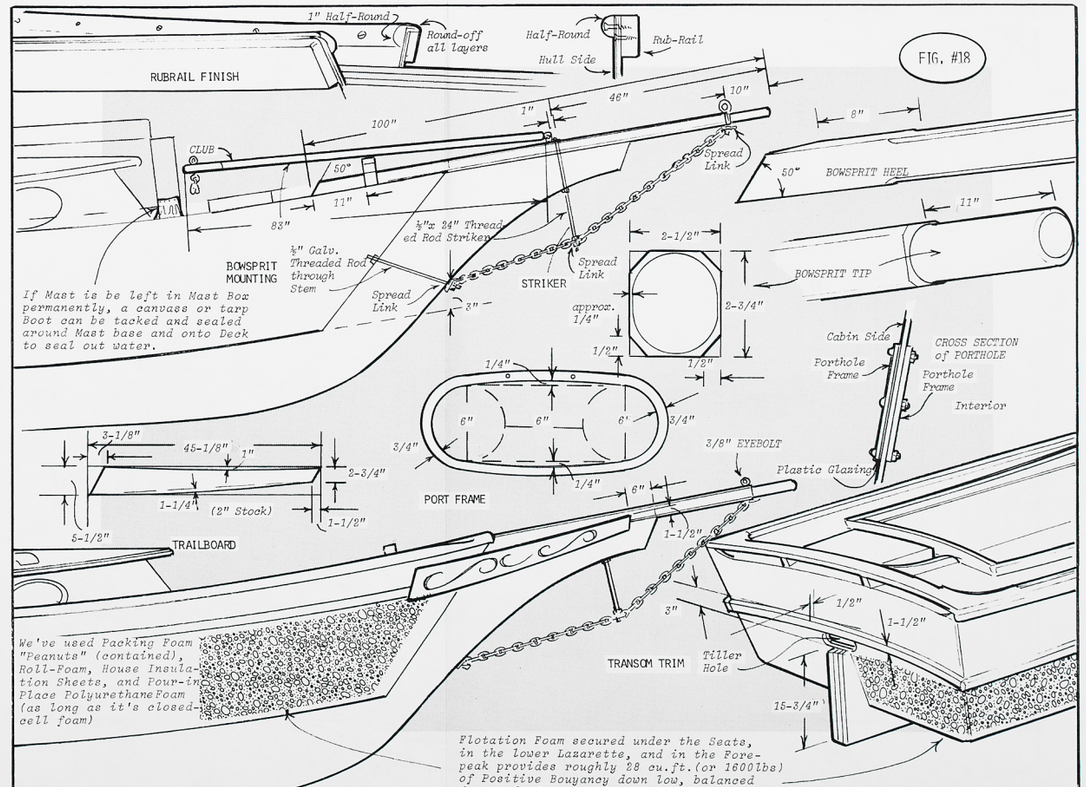

a beginner, you might skip ahead to cover-

ing the hard covers with cloth just to get

a feel of the material, but we wouldn't begin

the structure's sound, by installing a light

switch, that's where electrical problems won't show us much (as long as

wires don't short out). We installed a light

of fluorescent tube down the length of one

side of the bottom trim ripped to fit to

the edge near the keel to center this edge

some stands along the edge so a seam pre-

sents a ramp when overlapped.

Next we began the set-out, noting the

beveled edges of the hard covers. Too much

cloth right at the keel, or too little in the seam

makes a weak lamination, so we set

the bias tape turned transparent. Too much

material was beginning to grab the wood

between the cloth. Then we set it with a cover

sanded the cloth, pulled in the seam

and cloth that far as we worked down to

the bare wood. Then we rolled it back and

smoothed it into over the mat. painting a

be-coated with resin. Then we rolled cloth

cured. Next we rolled the mat back in

place. Then we rolled cloth the cloth and

off well. This is one step that can be

be-coated with resin. Then we rolled cloth

onto the cloth, pulled it the seam

and thoroughly with a stick of the brush.

a hard plastic squeegee a paint roller, extender handle to

the roller. Pour a puddle of resin

surface. Wearing thin in mind we very

careful with unpainted the cloth and wet back

about half way and rolled it back on itself.

Before using up the first puddle we

use as had a few extra brushes. A

don't panic. Using the squeegee and roller

over (if possible), and all the resin on all

the cloth. Add a few more puddles of resin

as needed. Keep the squeegee and roller

wet with resin. Don't be afraid to use a lot

of resin. We began by pouring the resin

onto the center of the deck and spreading

it to the corners/edges with the squeegee.

Then we used the roller to work the resin

out all bubbles to the edges. The idea

is to get the cloth saturated with resin, but

not be soaking in white. You're getting

enough resin when the cloth starts to look

clear. Don't worry about bubbles in the cloth

that need to be worked off to the edges or

ends. Bubbles trapped at the edges will

be removed later. Don't worry about

the material has soaked into the wood.

side of the hull, wetted the wood, rolled the

cloth over the edge and down the side.

Then we rolled the cloth with a short-bristle

brush to work the cloth into the corners and

bends, and at the bottom of the lower rub-rail.

Don't worry about bubbles in the cloth that

won't lie down flat, it's better to cut the

material kicked up along the center of the

cloth with a razor knife. Then we pulled the

material back in place, and wetting out the

cut. Don't worry about the cut in the cloth.

When the area is wetted out and

the cloth is saturated with resin, we

ran a squeegee and roller through the area

uniformly, and there's a surge just after the

squeegee passes. Watch for this and roll out

a razor knife. So we kept checking the area

completed to see which pots were ready for

After the glass was hard, we sanded light-

ly with 80-grit paper on a block to knock

the high spots off the cloth weave. Then we

build mat propped up firmly on the toilet

seat. Sanding out bubbles and fairing edge

with 80-grit paper on a block. Then we

sanded the entire hull with 120-grit paper

to get a good (but overlapped) lamination

before we began painting. Dust was vacuumed

from the hull with a shop vacuum cleaner.

When the area is wetted out and

uniformly, and there's a surge just after the

squeegee passes. Watch for this and roll out

bubbles in the cloth that won't lie down flat,

it's better to cut the material kicked up along the center of the

cloth with a razor knife. Then we pulled the material back in place, and wetting out the

cut. Don't worry about the cut in the cloth.

We can solve around all bulkheads, cut-

outs just to fill in fitting gap.

From here on out, the work got a little

more complex, so we began to use what we

used a router or Surform shaper to round

over the edges of the bulkheads, the cockpit

liners except the angled bases, the cockpit

coaming, the offset, the top corner edges

of the trailboards. After finish sanding, we var-

nished the bulkheads, cockpit liners, trailboards, portlide frames, handrails,

cockpit coaming, steering wheel, and tiller

removed for final finishing. We gave the

trim was of we gave the cabin and top sides

using a roller and brushing out immediately

To mount the handrails permanently, we

drilled a ½" hole down through the hand-

then bolted it down with 4 ¼" bolts.

At this point, we removed the handrails

and made up a router template to rout

the deck, cabin and cockpit. We covered

the deck with 1/8" plywood and the cabin

and cockpit with 1/4" plywood and the

edges of the cabin and cockpit with

rabbeted into the edges of the cabin and

cockpit. Then we routed the edges of the

plywood flush with the edges of the cabin

and

18" down from the top, then used a sharp, wide chisel to reduce the mast size about ¼" on all sides and rounded. We used the chisel, a Surform, and the belt sander to round off the top.

We used another 12" x 12", 1⅛" x ⅜" galvanized angle bracket for the mast-head mount for the shrouds. The sketch in Fig. #22 shows how we modified the 90° bracket to fit around the reduced size of the mast, resting down on the shoulder made by the cut and bolted with two ¼" bolts extending through the bracket and mast. We drilled out the two front holes to ⅜" so "quick-link" fittings could be inserted through.

A 6" x ⅜" eyebolt was opened in a vise. A double pulley and a quick-link were slipped in and the eyebolt was closed. We drilled a ⅜" hole 3" down from the top for the eyebolt.

Fig. #23 shows the construction of the gaff (which holds the top of the sail up above the mast) and the boom (which holds the bottom of the sail).

The gaff was 4x4 115" long ripped to 2" x 3" and bevelled like the bowsprit. The yoke (shown at top right in Fig. #23) was cut from 2" scrap stock and bolted to sandwich in the gaff's lower end with ⅜" threaded rods trimmed to the outside of the nuts. We drilled ⅝" holes down through the gaff top so eyebolts could be mounted to the gaff, as shown, recessing the bottoms of the holes so that the nuts were recessed into the bottom side of the gaff. Both gaff eyebolts were opened, a single pulley was run on each, and the eyebolts were reclosed before mounting. The top end of the gaff was cut, chiselled, and rounded just like the mast top and bowsprit tip. A ¾" hole was drilled down through the gaff 1½" back from its front end (for the throat halyard) and a ⅝" hole was drilled through the sides of the tips of the yoke 1" back from the front, for a short length of ¼" line which holds the yoke loosely to the mast.

The boom was a 4x4, 173" long, ripped to 2½" x 3" and bevelled with the tilt set at 45° and the rip guide at 30°, like the gaff and bowsprit. The aft end of the boom was cut, chiselled, and rounded like the spar tips.

The forward end of the boom was cut a little rounded, as shown in Fig. #23. ⅜" holes were drilled down through the 2½" wide top side as shown, with the top ends of the holes recessed so the nuts of the ⅜" eyebolts would be recessed below the surface of the boom. These 4" x ⅜" eyebolts were both opened in a vise and a double pulley was run onto the aft eyebolt and a single pulley run on to the forward eyebolt. As an upgrade, we left the forward single pulley off and later attached a "Harken Hexaratchet" pulley that acts almost like a winch and runs in a $30 range.

We cut, bent, and drilled two 1" x ¼" galvanized straps to be recessed into (for looks) and bolted to the front end of the boom so the ends of the straps were 1" apart as shown in Fig. #23. We drilled a 2" length of ½" galvanized pipe with a horizontal and a vertical ¼" hole, as shown, so a ¼" horizontal bolt through the mast gooseneck would allalow up and down boom pivoting, while the vertical holes through the boom straps could be linked to the pipe with a ¼" eyebolt to provide sideways pivoting. The galvanized cleats were attached to the side guides of the mast base to hold the jib and throat halyards.

Fig. #24 shows the mounting of the chain plates, the straps that link the mast to the hull. These were made from 12" x 1⅛" x ⅛" galvanized straps bent at the middle to extend up toward the top of the mast and down the side of the hull. To do this the straps reach through slots cut in the hull sides above the deck. The slots double as scuppers to let the deck drain when underway.

We measured back from the front of the side panel at the top, along the top rubrail to mark the fronts of these scupper holes, as shown in Fig. #24, bottom right. The holes were then marked and cut, (with these marks indicating their forward edge) by drilling out the ends with a ¾" spade bit, then cutting across with the sabre saw. We recut to angle these cuts so the straps would fit through at the angle shown, at bottom left in Fig. #24. We set the mast base in the mast hole, walked the mast up and slipped the lock pin (anchor bolt) in to hold the mast up. Then we bent the straps so they pointed up to the front of the mast head strap from each position.

We cut the doublers to fit inside the hull from scrap 1" stock to the shape shown in Fig. #24 at right. Then, with the strap held in place we drilled ⅞" holes through the holes and on through the hull side. The doubler was held against the inside of the hull, centered over the holes and these holes were drilled on through the doublers. We spread glue onto the doubler and bolted the chain plates on tight, sandwiching in the hull side between the strap and the doubler.

We used a ⅞" bit to drill out the top hole through the straps so that the right-hand threaded end of the galvanized iron turnbuckles (with ⅝" shank ends) could be opened, slipped through the top hole and reclosed. A nut was run onto this end of the turnbuckle was reassembled.

We used ⅜" cable for the shrouds, extending from the chain plates up to the masthead, and for the forestay, running from the bowsprit up to the masthead. This is fairly much overkill, but then again we haven't lost a mast for a couple of decades now. Stainless is the best, but plastic sheathed also works well over the years and is more readily available.

Whenever the cable ends are attached we used the same method: for example, at the turnbuckles at the chain plates or bowsprit, we bent a cable thimble to open it, slipped it through the upper end of the turnbuckle, bent the thimble back straight, then looped the cable end through the turnbuckle end and around the thimble, with about 8" free cable left over, doubled back on itself. We slipped a cable clamp over the cable and its doubled back end, threaded on the nuts of the clamp, ran the clamp down toward the thimble and tightened the clamp. A second clamp was mounted about 5" above the first. For faster attachment, these clamps can be loosened and run onto the cable before it's run around the thimble, then slipped down over the doubled back end and tightened. We used a fencing plier to cut off the cable ends about 2" above the upper clamp, then taped the free end to the cable running upwards to prevent snags to catch your hand on.

We cut two over-long side shrouds to 34' and a forestay to 20'. We layed the mast head back down and clamped the top end of the forestay permanently to the quick-link at the mast head strap. Then we inserted each shroud length through the quick-links inserted through side holes in the strap, pulled these through until the midpoint was reached, then put on a single clamp and thimble to lock in this positioning permanently. By permanently we mean clamped hard enough to crimp the cable.

Next, we clamped the bottom end of the forestay to the turnbuckle (with an opened bottom eye) at the bowsprit. We pulled on the forestay until the mast made about a 92° angle with the foredeck in front of it and then clamped the bottom end of the stay to lock in this adjustment with the turnbuckle adjusted almost all the way out. With the turnbuckles at the chain plates also adjusted "out" we clamped the bottom ends of the shrouds on both sides to the top eyes of the turnbuckles so the mast is perpendicular to the deck when viewed from the front or rear. The leftover cable ends were trimmed and taped and the cable clamps were retightened tightly as possible.

Before each sail during the first half dozen sails, the cable clamps should be tested to make sure the nuts are on tight. At this point the standing rigging was up. Now it gets a little complicated.

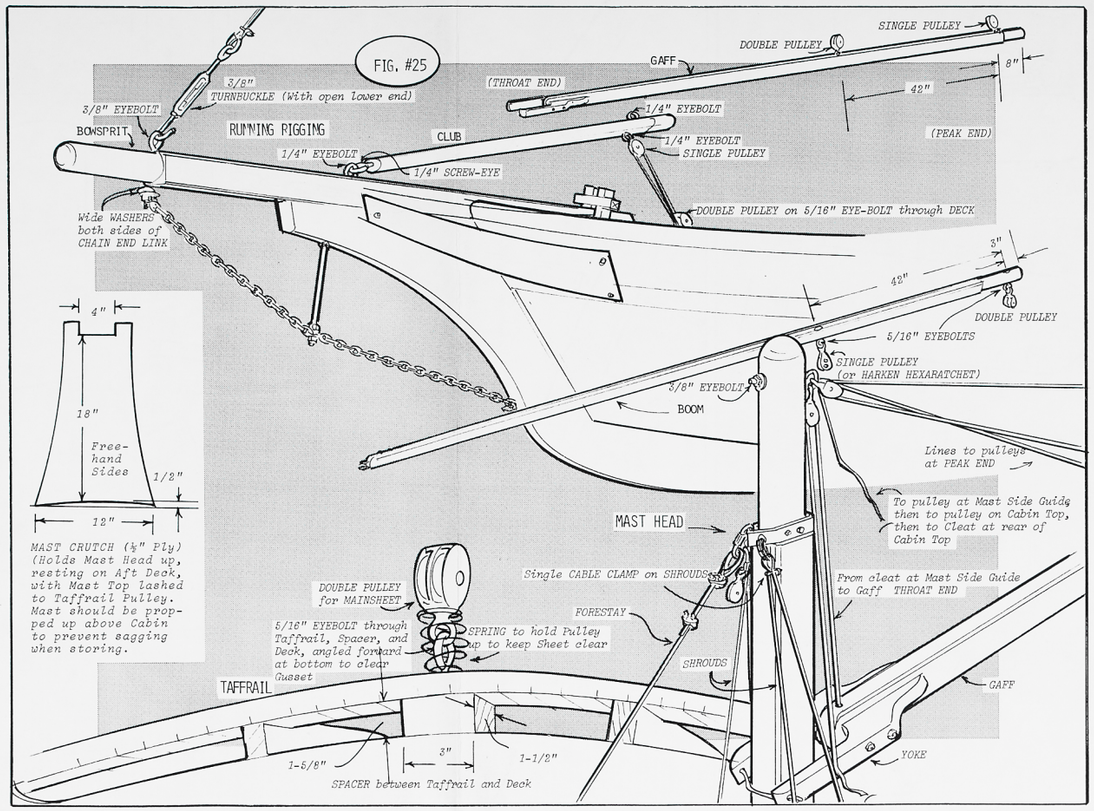

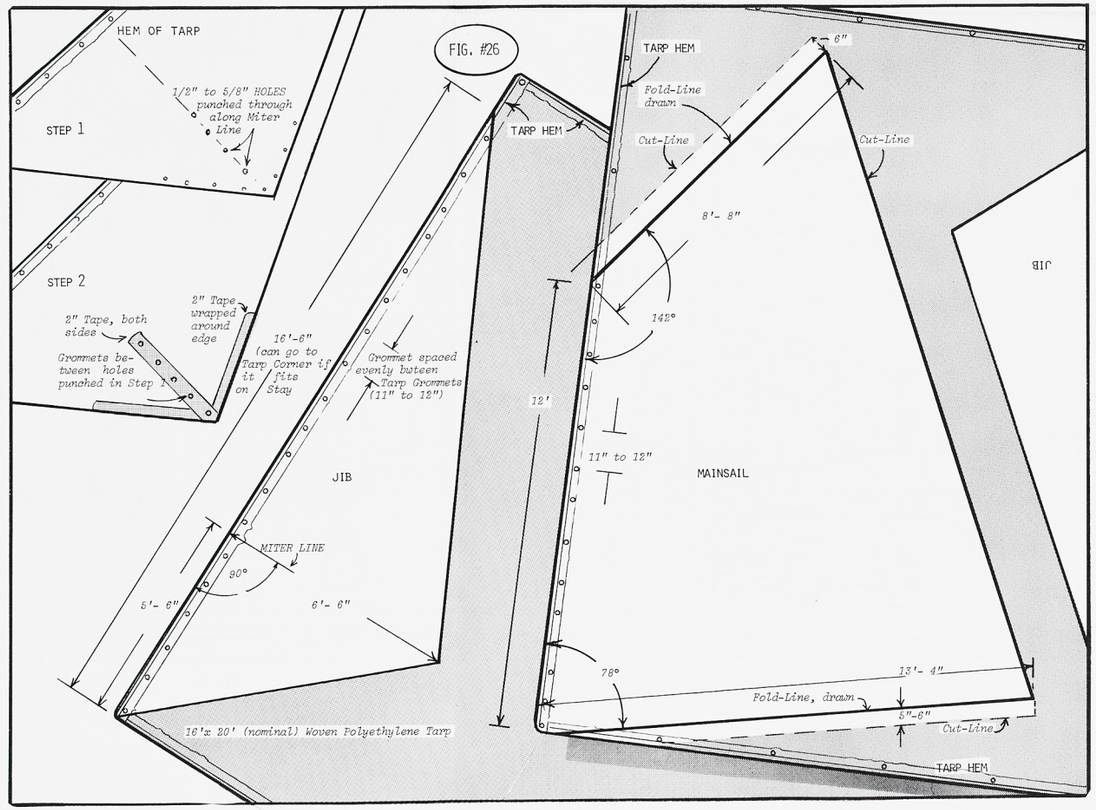

RUNNING RIGGING:

The aft end of the club foot was controlled by mounting a single pulley to a ¼" eyebolt, then the eyebolt was inserted up through the forward hole near the end. A double pulley was attached to a ⅜" eyebolt, a hole was drilled down into the deck on the center line halfway between the mast hole and hatch. The ⅜" eyebolt was inserted down through a wide washer, the hole in the deck, another wide washer, then a nut and lock nut were run on to prevent the pulley from pulling free from the deck. The ⅝" x 30' jib sheet was tied to the eye bolt on the club foot, then was run down through the double pulley, back up to the single pulley, back through the double pulley and back along the side of the cabin to a cleat screwed to the deck just forward of the cockpit coaming and about 4" out to the side. This cleat can be mounted to either side. By using a cleh foot and a non-overlapping jib, you don't have to go through the usual drill of loosening the leeward sheet and resetting the windward sheet on every tack. All you have to do is steer in most cases.

The ⅝" x 35' halyard raising the jib is run from the top corner of the jib up next to the forestay to a single pulley hooked to the quick-link holding the forestay, and back down to either cleat mounted to the side guides at the mast hinge.

The halyard that raises the front end of the gaff (called the throat) is inserted down through the hole near the yoke in the gaff. This line is run up to the single pulley at the top rear of the mast and back down to the other cleat mounted to the side guide on the other side. An eyebolt inserted into the gaff hole, and a clip on the end of the halyard line makes detaching the sails quicker.

The ¼" halyard that raises the rear end of the gaff (the "peak") is run from a clip hooked to the eyebolt at the top of the mast down to the pulley at the rear of the gaff back to the double pulley on the mast, back to the forward pulley, then up to the mast pulley and down to a pulley mounted with a quick-link to the port cleat on the side guide at the mast base, from the back to a small pulley mounted to a ¼" eyebolt attached through the cabin roof (seen in Fig. #29) and from here back to a cleat mounted securely to the cabin roof at the very rear.

This halyard was run back to the cockpit because running downwind you sometimes want to slack the peak a little for better sail shape. Also, on the first few sails, the halyards will be stretching too. You'll set the sails up tight and half an hour later, look up to see everything flapping slack. Also, if you're out there going along and things just don't feel right somehow and maybe a little sloppy, it's handy the peak should be pulled up tighter or the rudder pulled down harder.

The mainsheet, controlling the set of the boom, was run to a pulley mounted to the taffrail. We used a ⅛" x 6" eye bolt hooked through a double pulley. To keep the pulley from falling over and snagging a line (the mainsheet should always be able to let out on the boom at a moment's notice without snagging), we slipped the pulley and eye bolt down through a large diameter, small wire spring to hold the pulley from falling over when the line is slack, as shown in Fig. #25.

We cut 1½" x 3" spacer thick enough to fit firmly under the taffrail center. Then we drilled down through the rail, the spacer, and the deck, angling the hole forward to clear the transom. This eye bolt was held in place with a wide washer, nut and lock nut underneath the decking.

The ⅛" x 40' mainsheet was tied to one side of the lower double pulley just mounted. The line was led up forward through the double pulley on the boom, back down through the double pulley on the taffrail, back up through the double pulley, forward through the single pulley, and from then to hand. With an unballasted boat we never tie off the mainsheet.

CONTINUED ON PAGE

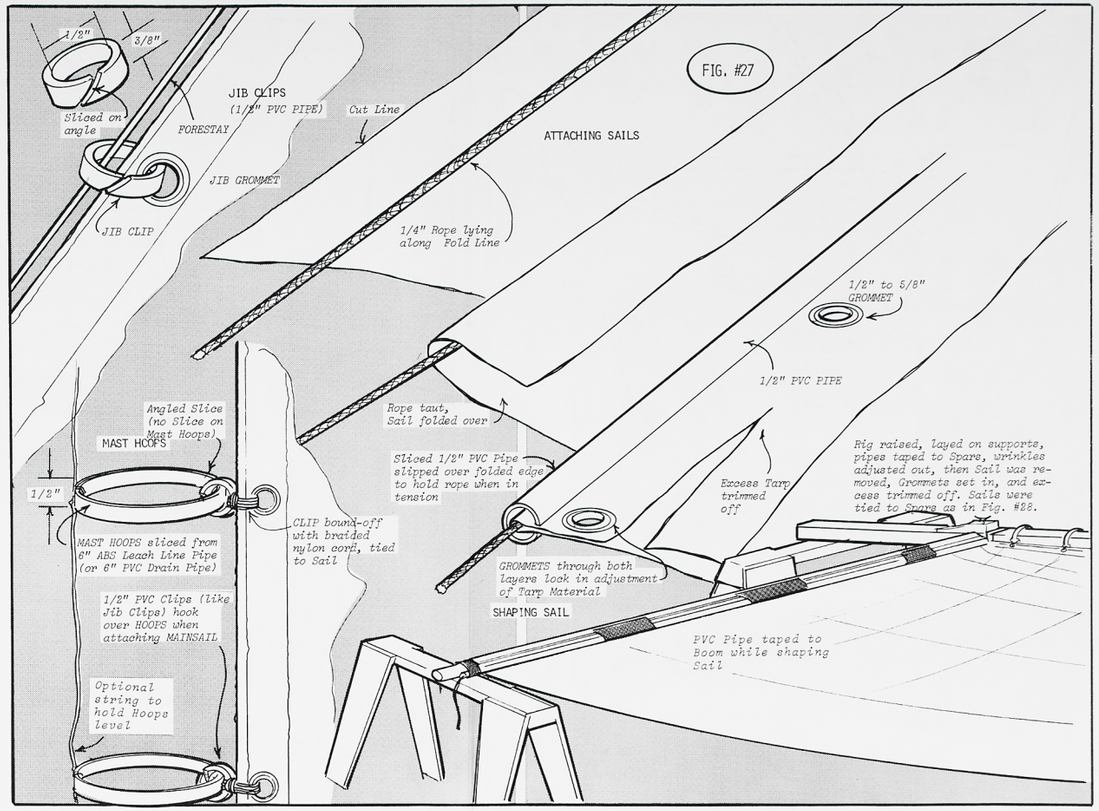

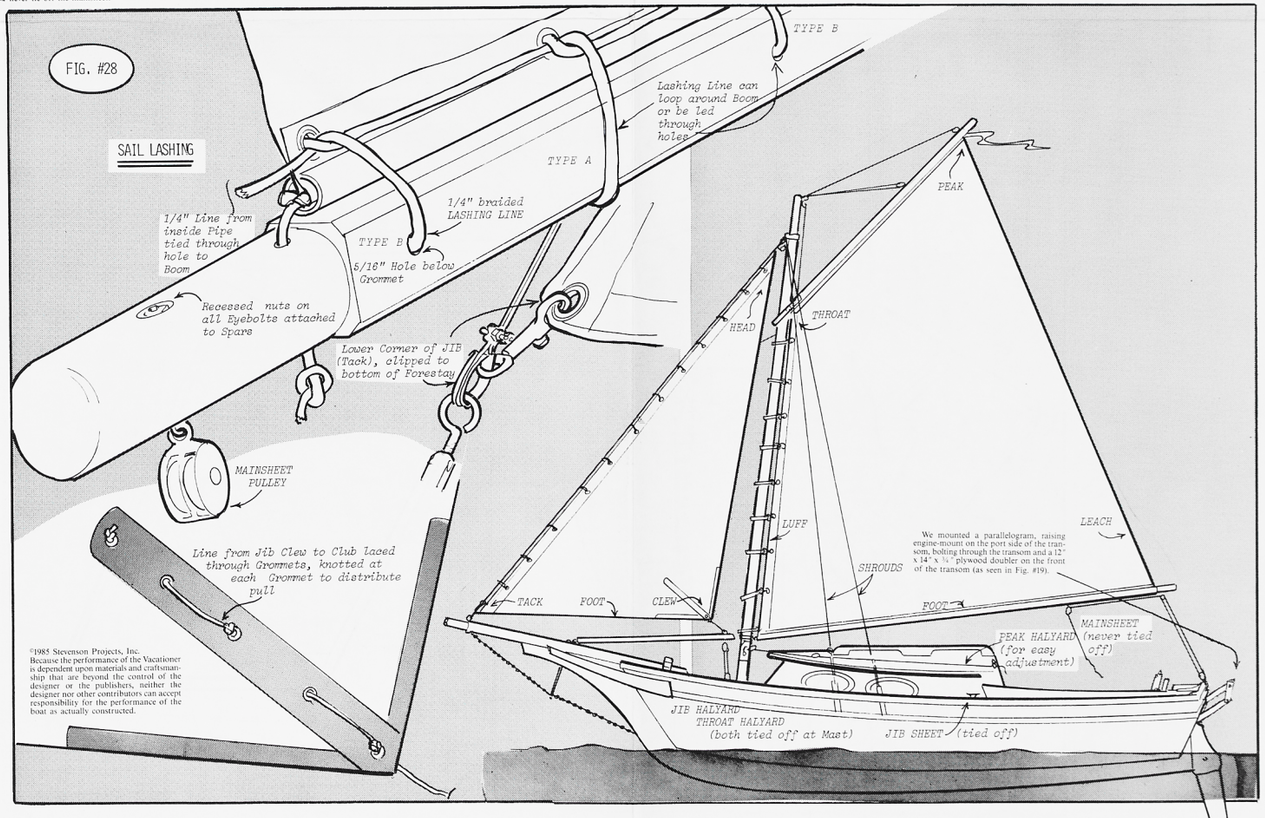

©1985 Stevenson Projects, Inc. Because the performance of the Vacationer is dependent upon materials and craftsmanship that are beyond the control of the designer or the publishers, neither the designer nor other contributors can accept responsibility for the performance of the boat as actually constructed.