Or all the sport projects we've built in the years since we started this enterprise, kite-sailing has been pretty the hard sailers have provided the most fun for us. Sailing, of course, is not a personal pastime, of course, but we've found it fascinating enough in itself to continue on sailing with the Hawaii Sailing Club for more than ten of our years of kite-sailing in a special class of boats we built ourselves.

To a sailor, the fierce need to coax the power out of the wind is always a fascinating challenge, and it's made more multiplied because you, right something you've built yourself, are sailing against a new-fangled, non-pedigreed boat that can dial out so much raw power. The challenge is so much more right has an amazing way of feeling like you're a match to get ahead and keep getting ahead. It's a match to go faster than anything down in a race car and simply separal challenge and excitement to sailing. Sailing is a sport, and sports are a bit, yet it's still largely individual. Sailing is a sport with many its advantages and disadvantages. A people-sport, it's a sport that involves everybody, many, petty rivalries, or rules—everybody you meet in the sport is a friend, and everybody you meet is a fellow-fan even if the public is still scratching its heads and wondering what it's all about, and what we like in land sailing.

Land sailing is a sport that takes several forms. There are the land speed record attempts, the sand-sailing, the ice-sailing, and the sailing on land or in the air, using the wind to drive a wheeled vehicle or a glider. Land sailing is a sport for people who want to be out from people who want to be out from people who want to be out from

STEERING ARM PIVOT BOLT

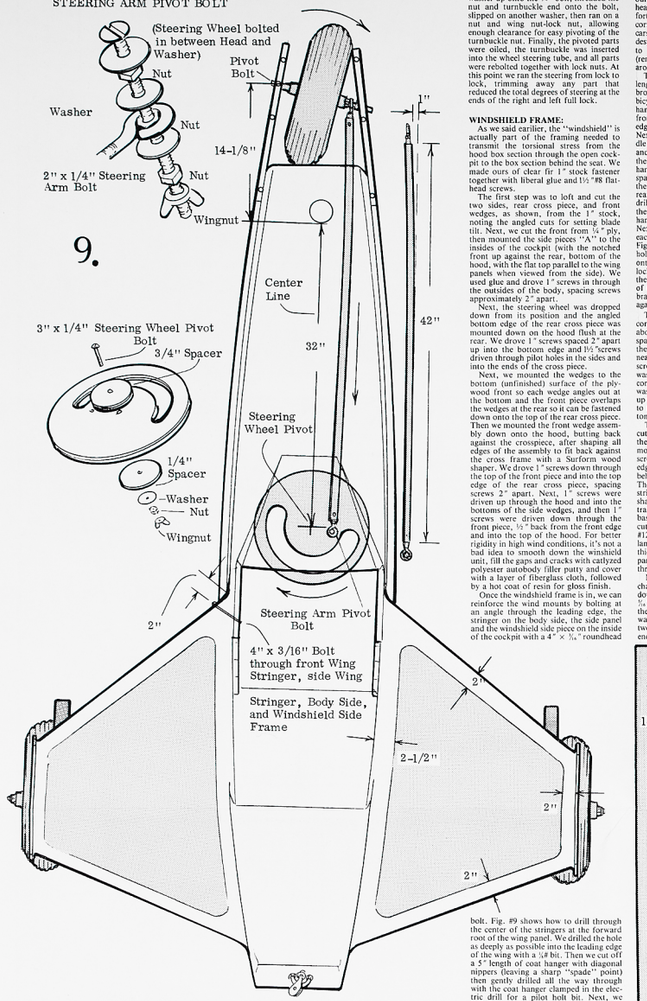

With the nut held in place, we slipped a washer up onto the ¼" bolt, threaded the nut and turnbuckle end onto the bolt, slipped on another washer, then ran on a nut and wing nut-lock nut, allowing enough clearance for easy pivoting of the turnbuckle nut. Finally, the pivoted parts were oiled, the turnbuckle was inserted into the wheel steering tube, and all parts were rebolted together with lock nuts. At this point we ran the steering from lock to lock, trimming away any part that reduced the total degrees of steering at the ends of the right and left full lock.

WINDSHIELD FRAME:

As we said earlier, the "windshield" is actually part of the framing needed to transmit the torsional stress from the hood box section through the open cockpit to the box section behind the seat. We made ours of clear fir 1" stock fastener together with liberal glue and ½ #8 flathead screws.

The first step was to loft and cut the two sides, rear cross piece, and front wedges, as shown, from the 1" stock, noting the angled cuts for setting blade tilt. Next, we cut the front from ¼" ply, then mounted the side pieces "A" to the insides of the cockpit (with the notched front up against the rear, bottom of the hood, with the flat top parallel to the wing panels when viewed from the side). We used glue and drove 1" screws in through the outsides of the body, spacing screws approximately 2" apart.

Next, the steering wheel was dropped down from its position and the angled bottom edge of the rear cross piece was mounted down on the hood flush at the rear. We drove 1" screws spaced 2" apart up into the bottom edge and ½ screws driven through pilot holes in the sides and into the ends of the cross piece.

Next, we mounted the wedges to the bottom (unfinished) surface of the plywood front so each wedge angles out at the bottom and the front piece overlaps the wedges at the rear so it can be fastened down onto the top of the rear cross piece. Then we mounted the front wedge assembly down onto the hood, butting back against the crosspiece, after shaping all edges of the assembly to fit back against the cross frame with a Surform wood shaper. We drove 1" screws down through the top of the front piece and into the top edge of the rear cross piece, spacing screws 2" apart. Next, 1" screws were driven up through the hood and into the bottoms of the side wedges, and then 1" screws were driven down through the front piece, ½" back from the front edge and into the top of the hood. For better rigidity in high wind conditions, it's not a bad idea to smooth down the windshield unit, fill the gaps and cracks with cattyzed polyester autobody filler putty and cover with a layer of fiberglass cloth, followed by a hot coat of resin for gloss finish.

Once the windshield frame is in, we can reinforce the wind mounts by bolting at an angle through the leading edge, the stringer on the body side, the side panel and the windshield side piece on the inside of the cockpit with a 4" × ¼" roundhead bolt. Fig. #9 shows how to drill through the center of the stringers at the forward root of the wing panel. We drilled the hole as deeply as possible into the leading edge of the wing with a ¼" bit. Then we cut off a 5" length of coat hanger with diagonal nippers (leaving a sharp "spade" point) then gently drilled all the way through with the coat hanger clamped in the electric drill for a pilot hole bit. Next, we drilled through from both ends with a ¾" bit, then drilled down into each end of the holes with a ¾" spade bit to provide a flat surface for the washers and nuts. We ran the bolts through washers, through the holes, from the inside of the cockpit, slipped washers onto the ends sticking out the leading edge of the wing, ran nuts on and tightened securely, then trimmed off the leftover threaded bolt. Both ends of the bolts can be filed over to a smooth, hardly noticeable lump in the filling and finishing steps.

BRAKES:

The VECTOR makes use of the rather crude, but time-honored scrub brakes, with one set placed on each rear wheel (so you can apply the one nearest to you when hiking out, helping to turn you into a tack—or you can use both from the cockpit for panic stops). For many years, we never used brakes on our sailcars because the only time we needed them was in coming to a full stop (when you can backwind the sail, holding it out the wrong way to stop you, and even back up).

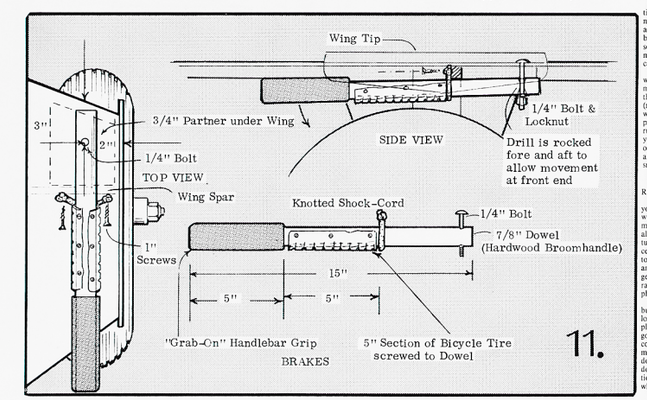

But, the VECTOR is a bit quicker than our previous cars and we found ourselves heading into corners faster than was comfortable. If you gradually slow down for corners, you lose time on the braked sailcars, so we attached this simple set, which despite the rudimentary looks, are enough to throw you forward in your seat (remember the rolling weight is only around 100 pounds, plus pilot!).

To build the brakes, we cut two 15" lengths of hardwood ¾" in diameter broom handle stock. We cut 5" lengths of bicycle tire, wrapped them around the handles with their front edges 5" back from the front ends, then screwed the edges to the handles, as shown in Fig. #11. Next, we cut one "grab-on" bicycle handle bar padded rubber to two 5" lengths and slipped them over the front ends of the handles (although you can use other handlebar grips just as well). ¾" thick spacers were screwed to the bottoms of the wings over the brake handles at the rear (as shown). Then a ¼" hole was drilled down vertically (with the tread of the bike tire on the bottom) through the handle 1½" forward of the rear end. Next, we drilled a ¼" hole down through each wing panel and spacer as shown in Fig. #11, inserted ¼" bolts down into the holes, slipped the holes in the handles up onto the bolts from the bottom and ran lock nuts on loosely to allow movement at the forward end. We trimmed the bottom of the wing spar as needed to allow the brake pads to clear the tires when pushed against the bottom of the wing.

Then we cut 7" lengths of rubber shock cord and drove screws in through the cord about 1" from one end and into the wing spar above the brake handle (to anchor the screw in the cord, we first tied a knot near the ends of the cords and drove the screws in through the knots, with a washer on the screws to help clamp the cord to the spar). The free end of the cord was looped under the handle, pulled tight up the other side, then screwed to the spar to the handle is held up against the bottom of the wing, clear of the tire.

To complete the body box section, we cut stringers to fit around the opening in the rear on the insides of the panels. We mounted these particular stringers with screws mounted 2" apart with the rear edge of all stringers sticking ¼" out behind the rear edges of the body panels. Then we shaved off the edges of the stringers at an angle with a Surform shaper to provide a flat surface for the transom to sit against. To provide a solid base for the mainsheet pulley mount, we cut a scrap of ¼" ply, as shown in Fig. #12, upper right (this reinforcer can be laminated up out of thinner ply to ½" thick), then mounted it to the front of the panel with glue and screws driven in through the rear and spaced 2" apart.

Next, we opened up a ¾" eyebolt with channel lock pliers or a vise, slipped on a double pulley, then reclosed the eyebolt. ¾" holes were drilled, as shown, through the transom and reinforcer, then a nut was run all the way onto the eyebolt and two nuts were run all the way onto the ends of a ¾" U-bolt. Wide washers were slipped over all threaded ends, then the ends were inserted through the holes in the transom. Wide washers were slipped onto threaded ends, from the other side of the reinforcer, and the nuts and lock nuts were run onto all threaded ends and tightened securely. (The U-bolt mounted below the pulley is used to provide a sliding surface for the pulley to rest on when the lines are slack, to prevent it from hanging back down the transom and becoming fouled when the slack is suddenly taken up).

The body of the VECTOR is a box section that can flex slightly. You won't notice this much except when tacking, but a certain amount of flex is normal and to be expected. To fill flex cracks at the seams around the cockpit and wing, we made use of DAP flexible tub and tile caulking which takes paint.

To provide a non-skid surface on the wing for hiking out, we cut ribbed, rubber matting to the shape shown in Fig. #9, then glued it down with contact cement (masking off the same area and painting with paint mixed with texturing compound will also work). We didn't apply rubber matting to the cockpit seat because you're generally in a hurry when entering or exiting the cockpit while underway, and we wanted to keep the surface smooth.

RIGGING

Sometimes the hardest step of rigging your sailcar can be finding the tubes, and we've come across a couple of tricks that may save you headaches and time. First of all, never use the phone to hunt down a tube supplier. When you call up to find a certain material, you rarely get a chance to talk to the person best qualified to answer your questions. What you usually get is a fast answer rather than an accurate one—one that will get you off the phone in a hurry.

Many times we've found that a distributor may actually have just what you're looking for, but it may take a bit of game-playing to get access to it. First, it's a good rule to show that you're sufficiently concerned about tracking down the material to show up in person. Next, don't scare the man off by loading him down with a bunch of confusing specifications until you get a chance to look over what he has in stock.

Just have a general idea of what you're looking for, and ask to help look around for it. If you simply call and rattle off a bunch of numbers, they'll usually pass you on to the next supplier in the Yellow Pages. Large distributors of tubing and raw materials won't want to bother with such a small retail order and will quote an astronomical price—if they deign to give one at all.

Salvage scrap and surplus yards sell aluminum tubing and material by the pound, and you shouldn't spend much over forty dollars for a rig. Another good source is irrigation suppliers, who can usually sell three twenty foot lengths for under fifty dollars. However, irrigation pipe is a little thinner and softer than most tubing stock, and should be reinforced with clear fir 1" x 3" boards trimmed to fit snugly inside the pipe. Shorter pieces can be spliced together in the same way, with 2" x 2" stock trimmed to fit.

What's the best tubing to look for? Anything from 2" to 2½" diameter aluminum tube (2⅛" is best) with a wall thickness of around ¼," or .065". If you have a choice of tempers, 6061-T6 seems to have the right sort of hardness, springiness and resistance to corrosion. As we said, however, wood reinforcers can but up softer pipes enough for use. Some builders report good luck with auto exhaust pipe welded up from 10' lengths.

To start rigging, cut the tubes to the lengths shown and rip the 1" x 3" clear fir or spruce reinforcing strips to fit snugly in the tubes (if needed). If the tube seems to lack springiness, or is a little on the thin side, we generally run reinforcing up the mast about three quarters of the way to the top, and down from the top of the upper boom (or gaff) down to about the center of the tube. After inserting the strips, drill all hardware mounting holes so that the strips will be held with their wide sides lying across the direction of the sailcar.

After the rig is assembled, the sail will be cut, and the rig is attached to the gaff and boom pockets. Then the mast can be slipped down into the mast hole, and the gaff can be raised by pulling down on the line running from the gaff, through the pulley block at the top of the mast and back down to be tied to the cleat near the base of the mast.

To connect the front ends of the gaff and boom, drill a 3/16" hole through both tubes about 1" back from the end (and through the reinforcers, the long way, if used). Then slip each end of a 3/16" U-bolt (check the materials list for exact specifications of the galvanized iron hardware used throughout the construction of the rig), through the tube holes, run on a nut, slip on the two-hole washer strip, and run on double locknuts and tighten securely.

The gooseneck is made up of two galvanized iron eyebolts. With pliers or a vise, twist the loop of one eyebolt so the loop of the second eyebolt can be slipped onto it. Then hammer or twist the opened eyebolt back closed again. Drill a 3/16" hole, as shown, through the mast (and through any reinforcer the long way) and through the boom, as shown, parallel to the hole drilled through the same tube at the front. Insert the ends of the joined eyebolts through the holes in the tubes and secure with double locknuts, and trim off the leftover bolts.

The halyard pulley block is held to the top of the mast with a 3/16" eyebolt mounted through a hole drilled about 1" down from the top and at right angles to the hole drilled through the mast for the gooseneck below. The eyebolt is inserted through the front of the hole and the single pulley block mounted with flat washers and double locknuts. The halyard line is tied neatly to the gaff in the position shown, then the knot is wrapped tightly with 2" grey duct tape to lock it in position.

After raising the gaff with the halyard, the free end of the line is tied to a galvanized cleat mounted vertically, as shown, near the base of the mast. Mount the cleat to the mast by drilling starter holes and then attaching the cleat with large sheetmetal screws driven into the mast.

To tie a line to a cleat, pull the line tight, wrap it once around the base of the cleat, then lead the line up over the center of the cleat, looping it over one ear of the cleat—then back over the center and loop it over the other ear. After looping the ears of the cleat a few times, make a final loop, twist it so that the free end of the line is now under the line from the previous, slip it over the ear and pull the free end tight.

When you pull the gaff up, you'll have a lot of loose line lying around and to prevent this from falling overboard, loop the free line in a coil and tie to the top ear of the cleat by reaching through the coil to grab the line leading from the cleat to the coil, pulling it back through the loop in a twisted loop, and slipping this loop over the top ear of the cleat.

Twist open two 3" × 3/16" eyebolts and slip a single pulley onto one and a double pulley on the other and close both. Drill a vertical 3/16" hole through the mast about 2" forward of the aft end and bolt the double pulley to the bottom of the boom. Drill and attach the single pulley forward on the boom in the position shown.

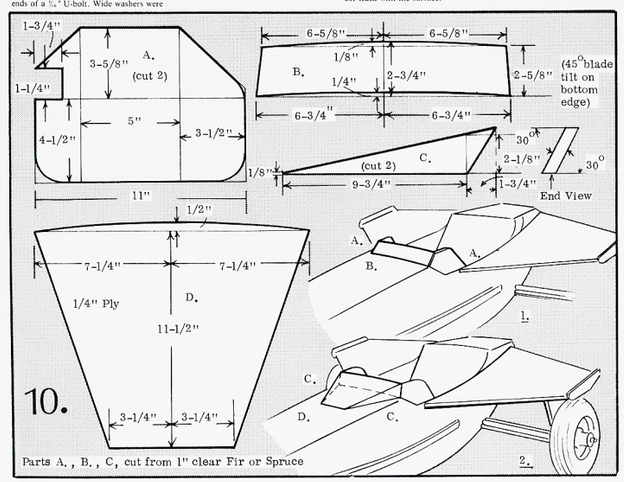

FINISHING:

The first step in finishing is to round off all corner edges with a Surform shaper to provide nice smooth curves with evenly radiused corners. Next, all gaps, cracks and screw heads should be filled with catalyzed polyester auto body putty. There are a few tricks to using this that can save a lot of time and make it an easy job to smooth the hull.

Mix up small batches (about ½ cup at most) on a smooth board or palette. Squeeze out about a 25 cent piece size blob of catalyst and mix quickly with turning strokes using a 2" or 3" putty knife. (Use a separate stick to dish out the putty from the can, preventing the catalyst from entering the can). As soon as the putty is mixed to a uniform gray-red (or gray-blue, depending on the brand), smooth it into the largest gaps to be filled first. Too much catalyst (making a dark colored putty) will make the putty harden too fast; too little (making a light gray mix) will prevent it from hardening, so stick with a "hotter" mix to begin with and work fast. On a hot day you'll need less catalyst, and never work in full sunlight or it will always harden too fast.

Work the putty rapidly into the depressions to be filled, smoothing out air bubbles and leaving a lump where there was a hole (smoothing it flat will result in a dent when the putty "goes off" and shrinks).

As soon as the putty begins to lump like cottage cheese on the palette, stop applying it and clean up the palette and putty knife. In a few minutes it will get like Swiss cheese (a good time to peel any spills off the floor). Then it will gradually harden to the point where you can scratch it with your fingernail and leave a white mark. At this point you can use the Surform (gently at first) to shave away great amounts of putty easily and quickly (like grating cheese). This will last about ten minutes, so work fast and you can smooth the whole hatch in a few minutes. After the whole boat has been filled and smoothed, you can mix up slightly "cooler" batches and give the filled spots a careful second treatment to fill any exposed of bubble holes, smoothing them off flush with the surface.

One builder wrote in to tell us that instead of cutting holes for the tape with scissors, he filed the end of a piece of ½" to ¾" pipe (O.D.) about 2" long so the end edge was sharp all around. Then he folded the pockets over, placed a board behind the seam and tapped the unsharpened end of the pipe or tube with a hammer to punch a neat hole through both layers of poly in one operation. This saves a lot of re-positioning and re-marking and will more than pay your time to make a simple punch. Or you can buy a ½" diameter grommet hole punch. Using a punch this way, the builder added, he and his wife were able to make their first sail in less than two hours!

Sailmaker's Tip

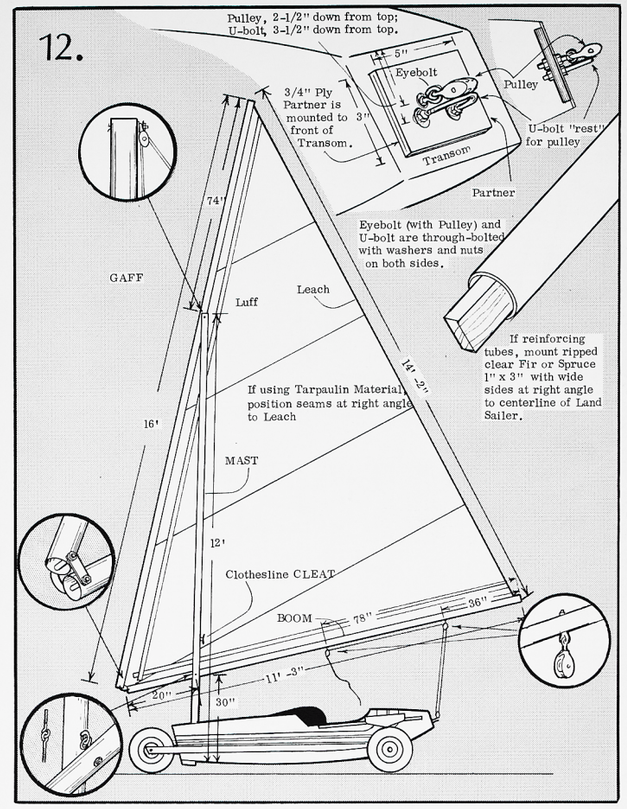

MATERIALS LIST

Plywood, ACX Exterior (or better) grade:
2- 4' x 8' x 1/4" Panels
1- 1' x 2' x 3/4" Scrap
Lumber, Clear Fir or Spruce
3- 8', 1" x 6"
3- 6', 1" x 3"
1- 1', 2" x 4"
1- 4', 1" x 10"
1- 3', 7/8" dia. Hardwood Dowel
Hardware:
300- 1", #8 plated, flathead Woodscrews
100- 1-1/2" #8 plated, flathead Woodscrews
6- 1-1/2" x 1/4" round head Bolts, Nuts, Washers
2- 5/16" U-bolts for 1" - 1-1/4" o.d. Pipe
1- 48" x 3/4" I.d. Galv. Pipe
2- 12" x 5/8" Bolts
2- 3/4" Galv. Pipe End Caps
7- 5/8" Washers
4- 5/8" Locknuts
3- 15" - 16" Wheelbarrow Wheels (6" wide hubs)
8- 3" x 1/4" round head Bolts, N/W
2- 36" x 3/4" x 1/8" Aluminum Straps
1- 12" x 3/4" x 1/8" Aluminum Strap
3- 1" x 3/16" Bolts, N/W
1- 6' x 5/8" i.d. Aluminum Tube
1- Aluminum Turnbuckle (with 5/16" eyebolts)
2- 4" x 3/16" Bolts, N/W
1- 12" x 5/8" Threaded Rod
1- 2" x 1/4" Flathead Bolt with 3 washers, 3 nuts, 1 wingnut (Steering Arm Bolt)
1- 3" x 1/4" Bolt with N/W and wingnut (Steering Wheel Pivot Bolt)
2- 2-1/2" x 1/4" Bolt, Locknut (Brake Bolts)
1- 1-3/4" old Bike Tire
1- "Grab-On" or other handlebar Grip
1- short length Shock-Cord
Rigging:
2- 12' 2" - 2-1/4" Tubes (see copy)
1- 16' 2" - 2-1/4" Tube
2- 1" x 3" Clear Fir, 8' (if needed)
5- 3" x 5/16" Eyebolts
1- 2" x 5/16" Eyebolt
2- Single Pulleys for 5/16" to 3/8" line
2- Double Pulleys for 5/16" to 3/8" line
2- 5/16" U-bolts for 2-1/4" to 3" pipe
1- Galv. Clothesline Cleat
50 ft., 5/16" to 3/8" braided nylon Line
1- 16' x 20' (before hemming rip-stop, layered, woven plastic Tarpaulin Material. (Makes two complete sails) -or 6-mil clear polyethylene
1- Roll 2" fabric-backed Duct Tape
Misc.
1- Gal. Oil-base gloss Enamel
1- Qt. Wilhold Plastic Resin Glue (or yellow Aliphatic, if well painted)
1- Qt. Catalysed Polyester Auto Body Putty

SAILING:

It's important to make sure the mainsheet is kept free of fouling when sailing so we make a habit of running frequent checks on the pulleys to make sure they don't get caught in a twisted position when the slack is taken out. To sail, we park the car facing the wind, then we place the mast bottom on the ground, pull down on the halyard to raise the gaff up tight, then tie-off to the cleat. At this point, we caution all helpers not to grab the rear end of the boom, but just let it "weather vane", making a lot of harmless noise flapping in the wind (it's when sails are *quiet* that they have power and have to be watched).

Next, we lift the boom off of the mast and stick it down into the body, making sure it's all the way to the bottom of the mast hole (we wrap tape around the mast at the hood level so we can tell visually if it's all the way in).

Next, we insert one end of the ¼" mainsheet forward through one side of the pulley on the transom and tie a double knot to prevent it from pulling back out. Then we thread the other end forward through the double pulley on the boom, back through the transom pulley, forward through the boom pulley and up through the single pulley, forward on the boom. (To get fancy, we mounted an optional Harken Hexaratchet for the forward pulley; this is a ratcheting pulley that makes sailing a little more comfortable). You don't need a ¾," or ½" mainsheet for strength, but we use the extra thick line for grabbing comfort.

The main sheet can be thought of as a gas pedal (to a limited extent). Turn the body at an angle to the wind, pull in on the main sheet and you move out. (In some cases pulling in too far can reduce your speed, however.) To get started, pull in the sheet until the sail just stops flapping (or "luffing"), and generally keep it out as far as possible without luffing.

To stop the car from sailing and from tipping you can do one or both of two things: Turn the nose toward the wind, or let out on the mainsheet, allowing the boom to swing out. Either will kill speed, but generally we keep an eye on developing situations to make sure there will be room to do at least one of these maneuvers, in case of a sudden gust. We always try to plan out our approach quickly before passing traffic or turning in next to parked cars, (or any move that will confine you).

Changes in the wind are slower than the controls if you're watching what's going on and keeping alert to the ever changing situation in a fast moving sailer like a sailcar.

In a stiff, steady breeze you can keep pulling in on the mainsheet until the windward wheel lifts off the ground. You can think of the mainsheet as a block and tackle hooked from the windward wing to a "skyhook". Pull in and the wheel will rise; let out and it will land. Most pilots get pretty good wheel-flying control in the first hour or two of sailing.

To give you extra speed (or just extra stability) without flying a wheel, you can sit out on the windward wing and run things from there. Of course, you can't sail directly into the wind, so to work to windward, you'll set off at an angle to the wind. When you run out of room (or too far from your eventual goal), you'll want to tack, or turn the nose into the wind and through to catch the wind on the other side. You can do this much faster in a sailcar than a boat, so be ready to move your weight fast to the other wing when it turns to face the wind. Don't get caught on the downwind wing, and above all, keep the mainsheet clear and free to let out in a hurry if you need to.

When tacking don't turn away from the wind (or "jibe") until you've gotten to the point where you can move pretty quickly from side to side. Later, you'll find that jibing is a fun maneuver and gives a terrific acceleration where you can catch any sailcar we've seen, including world-class machinery.

What happens when you dump it? We can't guarantee that somebody can't find a way to do it wrong, but we've dumped a lot of sailcars over the years for every reason you can think of (plus on-purpose when goofing around) and action has always been the same. Once it really gets tipped, things slow down as you lose power from the tipped rig. The mast is sturdy and acts as a roll bar, so the tips of the mast and boom scrape (along with the side of the rail and rear wheel) to grind things to a gentle stop. When we're in the cockpit, we stay put until things have stopped (then crawl sheepishly out). If on the wing, we stand on the cockpit side until stopped.

In a boat, you let the sail out when sailing downwind, to catch all the wind you can from behind. With the VECTOR, however, you "run out from under" the wind behind you, and although you start out down wind with the sail out, like a sailboat, the sail will go slack when you get your first speed and run out from under it. Then you have to pull in on the sheet to keep the sail from luffing in the breeze as you start to feel the wind on your face instead of your back as speed builds. As a result, you begin to run on what's called the "apparent wind," and eventually end up with your sails set just like you were sailing up into the wind, close hauled.

This is what allows you to sail a lot faster than the wind and although we've never heard an explanation that makes us believe anybody really knows what makes it work, we know it *does* work. And if you pull in on the sheet just fast enough to reset the sail in one smooth motion as the angle of the wind changes (also pumping air to the rear as you sweep the boom back), you'll drag out from any kind of sailcar we've seen.

Now that we've made it all sound complicated, just bear in mind that it's easy to master if you start out on an easy day when the wind isn't really whistling through. Don't get in over your head by taking out on a "hot" (really windy) day right off the bat. Test out your machine and yourself a step at a time and in a few hours you'll be getting up some good speed with a better understanding of what you're doing.

©1980 STEVENSON PROJECTS AND PUBLICATIONS

Because the construction of a VECTOR land sailer is dependent on factors of materials used and craftsmanship that are beyond the control of the designer and the magazine publisher, neither the designer nor other contributors can accept responsibility for the performance of the land sailer as actually constructed.

SAIL OPTIONS

Sail Kits:
For information regarding kits for building sewn, nylon sails tailored for the Land Sailer, write to Sailrite Kits, R.R. #1, Columbia City, Ind., 46725. Ph. 219-244-6715

Tarps:
The Tarpaulin material described in the plans is usually found in surplus and camping stores. However, if you find any difficulty in locating the Tarps we can supply you with one large enough for two complete sails for $30, plus $5 handling and shipping (California residents please add $1.80 for sales tax).

Please send me _____ tarpaulin(s) at $30.00 each Total: $_____

Available in orange or blue. First color choice:_____
Second Color choice:_____

Shipping and Handling Charges ($5.00 each) $_____

California Residents please add $1.80 each for Sales Tax $_____

TOTAL: $_____

Please make check or money order payable to Stevenson Projects OR you may charge to your MASTERCHARGE account (SORRY, we cannot accept VISA)

Account Number:_____ InterBank Number: _____

Expiration Date: _____ Signature: _____

SHIP TO: Please check if you'd like a free Brochure ____

NAME:_____

ADDRESS:_____

CITY:_____ STATE:_____ ZIP CODE:_____

(Please include your phone number in case we have a question:) A/C ____Phone____

NOTE: Please advise if United Parcel does not service your area and we will ship via Parcel Post. Please allow 2 to 3 weeks for delivery.

MAKING THE SAIL:

Years ago we brought out a way to make inexpensive sails in a couple of hours out of 6 mil polyethylene. The plastic sails proved themselves (in land sailer speeds above 30 knots) to be rugged and good for high speed use, but a little reduced on power in lighter winds, and somewhat vulnerable to abrasion in transporting them to the water. Recently we've tried out a new sail material using sun-resistant, rip-stop woven and laminated plastic tarpaulins and sewn-in seam ropes. They cost about $30, but they're extremely rugged, resistant to ultraviolet rays, have an already sewn-in leech line and they take on a nicer shape for better low-wind performance. Plus you can get two sails out of one tarp which brings your cost down to a little over $15 per sail!

They come already colored in either orange or blue and stand up to frequent transporting extremely well. You can use the same building steps for either the rip-stop plastic or polyethylene sails with one change: When laying the rig down onto the plastic, align the aft ends of the boom and gaff with a sewn hem so that the seams in the tarp extend forward from the leech (as shown in Fig. #12) at right angles to the leech or rear hem of the sail.

If you have any difficulty in locating a hardware or surplus store that stocks plastic tarpaulins, you can use the order blank included in the plans to order a tarp directly from us. Another option is fabric, two color sail kits available from Sailrite Kits in Columbia City, Indiana.

To mark the sail shape, use a 10" wide box as a guide to slide along the outsides of the tubes while marking the plastic 10" outside the tube with a felt tip pen. Cut along the lines marked, then trim the plastic off at the boom ends at right angles to the tubes, as shown.

With small scissors cut holes along the top and bottom (but not the rear) edges of the sail. These holes should be about ½" in diameter, with about ½" margin in from the edge of the plastic. Space the holes about 4" apart.

Next, fold the edges with holes back over onto the sail, making a 12" wide pocket along the boom and gaff edges. Smooth the plastic flat along the fold, pulling the pocket material tight from both ends; then use the pen to mark the exact positions of all the holes through onto the lower layer of plastic while the edge is held in position.

Cut out these holes and fold the plastic over into a pocket again and smooth out flat. Now run an unbroken strip of 2" wide grey duct tape (use the fabric-backed kind, not the all-plastic type) along the row of holes, overlapping the seam of the pocket edge. When reaching the end of the pocket at the edge of the sail, cut a 1" diameter semicircle in the sail edge and then run the tape over this, as shown. Work on a carpet, if possible, to prevent picking up dirt on the adhesive side of the tape.

Carefully turn the sail over and apply a second strip of tape to the other side of the sail, following the path of the first strip of tape, so that the adhesive of both strips of tape can grab onto each other through the holes in the sail. This is the real strength of the seam, so make certain the holes are aligned before taping. Now rub down both sides of the seam thoroughly with your palms, to make certain the two layers of tape adhesive together to make a good bond. Place a block of wood behind the sail and tap the taped seam with a hammer all along the edge to get an extra-strong grip on the tape. Use pliers to tape the other seam of the sail.

To attach the sail to the rig, remove the gaff and boom from the mast and insert each into its pocket in the sail. Pull the rear ends of the boom and gaff apart so that the sail is pulled tight, then wrap tape around the tips of the sail at the ends of the tubes to attach. Cut rounded holes so that the halyard, pulley blocks and gooseneck can stick out through the pockets, then reassemble the rig.

The plastic sail itself has proved to be extremely durable in heavy wind conditions, and has given years of service. Like a dacron sail, however, it should be stored out of direct sunlight when not in use.

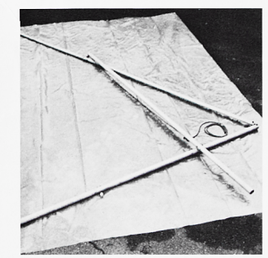

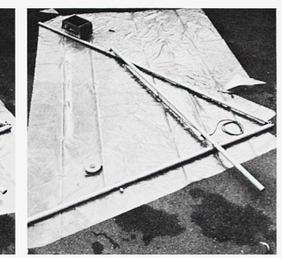

For our free Brochure, check the space in the coupon at top right and include your address. Brochure Projects include a 14' Catamaran, 22' Pontoon Boat, Redwood Hot-Tub, Miniature Indy Race Car (for kids and adults, -needs no welding), Super-simple beginner's Sailboat, Hydrofoil, 3-way Dinghy for rowing, sailing, and motoring, Extra Complete Sewing Center, Modular Greenhouse, and lots more!